Bastrop County

REQUEST FOR BIDS

Bid Reference Number: RFB 25BCP08A

Project Title: Hall Road Drainage Improvement Project - DR-4232-0072

Bid Closing Date: 2 :00 P.M. (CST), October 16, 2025

Mandatory Pre-Bid Meeting: 10AM on October 10, 2025 - At Project Location

Table of Contents.....Page 2

Request for Bids
(1) Introduction.....Page 3
(2) Definitions.....Page 3
(3) General Information.....Page 4
(4) RFB Withdrawals and/or Amendments.....Page 6
(5) Bid Submittal Requirements.....Page 6
(6) Bid Evaluation and Contract Award.....Page 7

Appendix A – Scope of Services
Project Title.....Page 9
(1) Scope of Services Contact.....Page 9
(2) Bid Evaluation Factors.....Page 9
(3) Key Events Schedule.....Page 9
(4) Scope of Services.....Page 9
(5) Content of Bid.....Page 10

Appendix B – Bid
Bid Verification.....Page 39

I Contract Award Information

(1) Term of Contract.....Page 40

(2) Federal, State and/or Local Identification Information.....Page 40

II Contract Terms and Conditions

(1)Standard Terms and Conditions.....Page 40

RFB Acknowledgement Form.....Page 52

Appendix C – Form CIQ.....**Page 53**
Appendix D – Statement of Bidder's Qualifications.....**Page 55**
Appendix E – Certificate of Interested Parties (Form 1295).....**Page 58**
Appendix F – HB 89 Verification Form.....**Page 61**
Appendix G – Bastrop County Section 3 Resolution.....**Page 62**
Appendix H – Federal Labor Standards Provisions.....**Page 67**
Appendix I – Prevailing Wage Rates.....**Page 79**
Appendix K – Contractor's Local Opportunity Plan.....**Page 85**
Appendix L – Non-collusion Affidavit of Prime Bidder.....**Page 87**
Appendix M – Contractor Certifications – Civil Rights.....**Page 88**
Appendix N – Nondiscrimination on the Basis of Disability.....**Page 89**
Appendix O - Byrd Anti-Lobbying Amendement.....**Page 90**

Bastrop County

Request for Bids

1. Introduction

A. Project Overview: Bastrop County is requesting Bids with the intent of awarding a contract for the services contained in Appendix A – Scope of Services.

B. RFB Questions:

i. RFB Clarifications: All questions related to requirements, processes or scope of work for this RFB should be submitted in writing to the Purchasing Agent identified in section 2 below. The County is the final judge of the meaning of any word(s), sentences, paragraphs or other parts of the solicitation documents. Bidders are encouraged to seek clarification, before submitting a Bid, of any portion of the Bid documents that appears to be ambiguous, unclear, inconsistent, or otherwise in error. Clarifications will be in writing.

ii. Replies: Responses to inquiries which directly affect an interpretation or effect a change to this RFB will be issued in writing by addendum and will be uploaded to the Bastrop County website (http://www.co.bastrop.tx.us/page/pur.Bids). All such addenda issued by County prior to the submittal deadline shall be considered part of the RFB. The County shall not be bound by any reply to an inquiry unless such reply is made by such formal written addendum.

iii. Acknowledgement of Addenda: The Bidders must acknowledge all addenda by signing and returning such document(s) or by initialing appropriate area of the Bid.

C. Notification of Errors or Omissions: Bidders shall promptly notify the County of any omissions, ambiguity, inconsistency or error that they may discover upon examination of this RFB. The County shall not be responsible or liable for any errors and/or misrepresentation that result from the solicitations which are inadvertently incomplete, ambiguous, inconsistent or obviously erroneous.

D. Conflict of Interest Questionnaire (Form CIQ): A person or business, and their agents, who seek to contract or enter into an agreement with the County, are required by Texas Local Government Code, Chapter 176, to file a conflict-of-interest questionnaire (FORM CIQ) which is found in Appendix C.

E. Certificate of Interested Parties (1295 Form): A person or business, and their agents, who seek to contract or enter into an agreement with the County, are required by Texas Local Government Code Chapter 2252, Subtitle F, Title 10, Section 2252.908, to file a disclosure of interested parties with the Texas Ethics Commission (https://www.ethics.state.tx.us/whatsnew/elf_info_form1295.htm). A sample form and instruction sheet can be found in Appendix D.

F. House Bill 89 Verification Form: A person or business, and their agents, who seek to contract or enter into an agreement with the County, are required by Texas Local Government Code Chapter 2270 Section 1, Subtitle F, Title 10, Section 2270.001to submit a verification form to the County. This Chapter reads "Prohibition on Contracts with Companies Boycotting Israel". This form is found in Appendix E.

G. Texas Senate Bill 13 (Sb 13): Energy Company Boycotts: If contractor is required to make a verification pursuant to section 2274.002 of the Texas Government Code, contractor verifies that it does not boycott energy companies and will not boycott energy companies during the term of the contract. If contractor does not make that verification, contractor must indicate in its response and state why the certification is not required.

H. Texas Senate Bill 19 (Sb 19): Firearm Entities And Trade Associations Discrimination: If contractor is required to make a verification pursuant to Section 2274.002 of the Texas Government Code, contractor verifies that it (1) does not have a practice, policy, guidance, or directive that discriminates against a firearm entity or firearm trade association and (2) will not discriminate during the term of the contract against a firearm entity or firearm trade association. If contractor does not make that verification, contractor must so indicate in its Response and state why the verification is not required.

I. 2 CFR 200: In accordance with PART 200 of the UNIFORM ADMINISTRATIVE REQUIREMENTS, COST PRINCIPLES, AND AUDIT REQUIREMENTS FOR FEDERAL AWARDS, Bastrop County follows the procurement standards in the Code of Federal Regulations of 2 CFR 200.317 – 2CFR 200.327 and Appendix II to Part 200 for procurement actions to be funded with Federal funds.

2. Definitions

Bid: The signed and executed submittal of the entirety of Appendix B – Bid.

Bidders: The Bidder and the Bidder's designated contact signing the first page of the Bid.

County of Bastrop ("County"): The County of Bastrop, Texas.

Bastrop County Purchasing Office: The Bastrop County Purchasing Office is located at 1041 Lovers Lane, Bastrop County 78602. PH: (512) 581-7110; Fax: (512) 581-4228.

Project: The name is identified on the cover sheet and first page of Appendix A – Scope of Services.

Purchasing Agent: Bastrop County Purchasing Agent is Leon Scaife:
Phone: (512) 581-7110
E-Mail: leon.scaife@co.bastrop.tx.us

Request for Bid (RFB): The entirety of this document, including all Appendices and Addenda.

Scope of Services: The entirety of Appendix A – Scope of Services.

3. General Information

A. Tax Exempt Status: County purchases are exempt from State Sales Tax and Federal Excise Tax. Do not include tax in the Bid. County will furnish Excise Tax Exemption Certificate upon request.

B. Public Inspection of Bids: The County strictly adheres to the Texas Public Information Act (Texas Government Code Chapter 552.001, et seq.) and all other governing statutes, regulations, and laws regarding the disclosure of RFB information. Bids are not available for public inspection until after the contract award. If the Bidders has notified the County, in writing, that the Bid contains trade secrets or confidential information, the County will generally take reasonable steps to prevent disclosure of such information, in accordance with the Public Information Act. This is a statement of general policy only, and in no event shall the County be liable for disclosure of such information by the County in response to a request, regardless of the County's failure to take any such reasonable steps, even if the County is negligent in failing to do so.

C. Legal Relations and Responsibilities: Bidders shall maintain adequate records to justify all charges, expenses and costs incurred in performing the Services for a period of at least Five (5) years following the termination date of the contract. The County shall have full and complete access to all records, documents and information collected and/or maintained by Bidders in the course of the administration and performance of the Contract. This information shall be made accessible at Bidder's local place of business in the County's jurisdiction, for purposes of inspection, reproduction and audit without restriction.

D. Application: These standard terms and conditions shall apply to all County of Bastrop (hereafter "County" or "Owner") solicitations and procurements, unless specifically accepted in the solicitation specifications.

E. Requirements: By submitting a Bid, the Bidders agrees to provide the County of Bastrop with the specified goods or services described in the solicitation in accordance with these standard terms and conditions, at the agreed upon Bid price and in compliance with the stated specifications and any subsequent addendums issued prior to the date of the Bid opening.

F. Legal Compliance: Bidders must comply with all Federal, State and Local laws, statutes, ordinances, regulations and standards in effect at the time of delivery of goods and services, and must maintain any and all required licenses and certificates required under the same laws, statutes, ordinances, regulations and standards for services and/or goods provided in response to this solicitation. Bidders certifies that he/she holds all licenses required by the State of Texas for a provider of the goods and/or services described by the Scope of Services herein.

G. Right to Refuse Bid: The County reserves the right to refuse any and/or all parts of any and or/all Bids and to waive formalities in the best interest of the County. Bastrop County does not discriminate on the basis of race, color, national origin, sex, religion, and age or disability status in employment, procurement or provisions of service.

H. Estimated Quantities: If the solicitation calls for unit pricing on specific items, the quantities described for each item are estimates only and not guaranteed amounts. The actual amount ordered over the contract period may be more or less than the estimate. Quantities represent the County's best estimate, based on past history and anticipated purchases.

I. Independent Consulting Firm: Bidders agrees that Bidders and Bidder's employees and agents have no employer-employee relationship with County. Bidders agrees that if Bidders is selected and awarded a contract, County shall not be responsible for the Federal Insurance Contribution Act (FICA) payments, Federal or State unemployment taxes, income tax withholding, Workers Compensation Insurance payments, or any other insurance payments, nor will County furnish any medical or retirement benefits or any paid vacation or sick leave.

J. Assignments: The rights and duties awarded the successful Bidders shall not be assigned to another without the written consent of the Bastrop County Purchasing Agent. Such consent shall not relieve the assigner of liability in the event of default by the assignee.

K. Liens: Bidders shall indemnify and save harmless the County against any and all liens and encumbrances for all labor, goods, and services which may be provided to the County by Bidders or Bidder's vendor(s), and if the County requests, a proper release of all liens or satisfactory evidence of freedom from liens shall be delivered to the County.

L. Gratuities/Bribes: Bidders certifies that no bribes in the form of entertainment, gifts, or otherwise, were offered or given by the successful Bidders, or its agent or representative, to any County officer, employee or elected representative, with respect to this RFB or any contract with the County, and that if any such bribe is found to have been made this shall be grounds for voiding of the contract

M. Financial Participation: Bidders certifies that it has not received compensation from the County to participate in preparing the specifications or RFB on which the Bid is based and acknowledges that this contract may be terminated and/or payment withheld if this certification is inaccurate.

N. Responsiveness of Bids: The County desires to receive competitive Bids, but will declare any Bid "non-

responsive" if they fail to meet the significant requirements outlined in this solicitation document.

O. Discrepancies and Errors: In the case of a discrepancy between the unit price and invoice price, the Bid price (Price per cubic yard) will prevail. The unit-based price of a Bid that has been opened may not be changed for the purpose of correcting an error in the Bid price.

P. Identical Bids: In the event two or more identical Bids are received, and are lowest, responsible and responsive, award will be made as prescribed in the Texas Local Government Code, Chapter 2.62.027(b).

Q. Withdrawal of Bids: Bidder may withdraw any submitted Bid prior to the Bid submission deadline. Bidder may not withdraw once the Bids have been publicly opened, without the approval of the County's Purchasing Agent. Bidder will be allowed to withdraw Bids that contain substantial mathematical errors in extension. However, once a Bid has been withdrawn, it can no longer be considered.

R. Disqualification of Bidders: The County may disqualify Bidder, and their Bid not be considered, for any of the following reasons: Collusion among Bidder; Bidder's default on an existing or previous contract with the County, including failure to deliver goods and/or services of the quality and price Bid; Bidder's lack of financial stability; any factor concerning the Bidder's inability to provide the quantity, quality, and timeliness of services or goods specified in the solicitation; Bidders involved in a current or pending lawsuit with the County; Bidder's attempt to influence the outcome of the solicitation through unauthorized contact with County officials outside of those listed in the solicitation documents; and Bidder's attempt to offer gifts, gratuities, or bribes to any County employee or elected official in connection with a solicitation.

S. Waiver of Formalities: County reserves the right to reschedule, extend, or cancel this RFB at any time. County reserves the right to reject any or all responses, and to waive formalities or irregularities in connection with this RFB and may consider submissions not made in compliance with this request for Bid if it elects to do so, to the extent permitted by law, although the County will have no obligation for such consideration. The County reserves the right to waive any minor irregularities that do not materially affect the scope or pricing of submitted Bids.

T. Outstanding Liabilities: Bidder shall not have outstanding, unpaid liabilities owed to the County. Liabilities may include, but are not limited to, property taxes, hotel occupancy taxes, and license or permit fees. Bid will be considered non-responsive and not given further consideration if submitted by a Bidder with such outstanding liabilities.

U. Offset: The County may, at its option, offset any amounts due and payable under contract award under this solicitation against any debt lawfully due the County from a vendor, whether or not the amount due arises pursuant to the terms of the contract and whether or not the debt has been reduced to judgment by a court.

V. Solicitation Results: The County normally posts solicitation results on-line after Bids are received and approved in Commissioner's Court. The County's website is www.co.bastrop.tx.us. Results are on the Purchasing Solicitation page, in the same place as the original solicitation documents. Posted results are for informational purposes only, not a notice of award.

W. Control of The Work: Bidders shall furnish all materials and perform work in reasonably close conformity with the scope of work referenced in this request for Bid. Bidders must obtain written approval from Bastrop County before deviating from the scope of work provided in this request for Bids. Failure to promptly notify Bastrop County of any errors or concerns with the scope of work will constitute a waiver of all claims for misunderstandings or ambiguities that result from the errors, omissions, or discrepancies discovered.

X. Cost of Bid: The cost of submitting a Bid shall be borne by the Bidder, and the County will not be liable for any costs incurred by a Bidders responding to this solicitation.

Y. 2 CFR 200: Bastrop County follows the procurement standards in 2 CFR 200.317 – 2 CFR 200.327 and Appendix II to Part 200 for procurement actions to be funded with Federal funds. All attempts are made to adhere to these policies and procedures and updates are made as needed. The entirety of the language found in 2 CFR 200.317 – 2 CFR 200.327 may not be applicable in all instances, programs, and/or situations. The entirety of 2 CFR 200 applies to Federally funded programs/projects and are agreed upon by the contract awardee without exception.

4. RFB Withdrawals and/or Amendments

A. RFB Withdrawal: The County reserves the right to withdraw this RFB for any reason.

B. RFB Amendments: The County reserves the right to amend any aspect of this RFB by formal written Addendum prior to the Bid submittal deadline and will endeavor to notify all potential Bidder that have registered with the County, but failure to notify shall impose no obligation or liability on the County. All modifications and addendums must be in written form prepared by the County department issuing the solicitation. Bidders is responsible for incorporating any and all modifications and addendums into their Bids.

5. Bid Submittal Requirements

A. Submittal Packet – Required Content: Bidders shall submit one (1) signed original bid. This submittal packet shall be submitted in a sealed envelope with the completed and signed forms and documents listed in Appendix B – Bid Verification (Page 10).

B. Submittal Deadline: The deadline for submittal of Bid is 2:00PM (CST) October 16, 2025. It is the Bidder's responsibility to have the bid correctly marked and hard copies delivered to the Bastrop County Purchasing Office. No extensions will be granted, and no late bids will be accepted.

C. Bids Received Late: Bidders are encouraged to submit their bid as soon as possible. The time and date of receipt as recorded in the Bastrop County Purchasing Office shall be the official time of receipt. The County is not responsible for late delivery of mail or other carriers. Late bids will not be considered under any circumstances.

D. Alterations or Withdrawals of Bid: Any submitted Bid may be withdrawn or a revised Bid substituted if a written notice is submitted to the Bastrop County Purchasing Office prior to the submittal deadline. Any interlineations, alteration, erasure or other amendment made before the submittal deadline, must be signed or initialed by the Bidders or the Bidder's authorized agent, guaranteeing authenticity. Bids cannot be altered, amended or withdrawn by the Bidders after the submittal deadline.

E. Bid Format: All Bids must be prepared in single-space type, on standard 8-1/2" x 11" vertically oriented pages, using one side of the paper only. Pages shall be numbered at the bottom. Entries shall be typed, or legibly written in ink. All Bids shall be mailed or hand delivered to Bastrop County. Any other format (via telephone, fax, email, etc.) shall be rejected by the County.

F. Validity Period: Once the submittal deadline has passed, any Bid shall constitute an irrevocable Bid to provide the commodities and/or services set forth in the Scope of Services at the price(s) shown in the Bid on the terms set forth in the Bid, such Bid to be irrevocable until the earlier of the expiration of ninety (90) days from the submittal deadline, or until a contract has been awarded by the County.

6. Bid Evaluation and Contract Award

A. Bid Evaluation and Contract Award Process: An award of a contract to provide the goods or services specified herein will be made using competitive sealed bids, in accordance with Chapter 262 of the Texas Local Government Code and with the County's purchasing policy. Bastrop County will score all eligible respondents based on the Bid evaluation factors listed in Appendix A. A contract will be awarded to the most qualified

Bidder that meets all evaluation factors of this request for Bid and provides or meets all requirements set forth by Bastrop County in this RFB. The selected Bidders must NOT be debarred from any federal and/or state agency and Bastrop County will conduct a review of the Bidder's status on SAM.Gov. The Bastrop County Commissioners' Court will make the final selection and award. **The County has the right to reject any and/or all Responses.**

B. Completeness: If the Bid is incomplete or otherwise fails to conform to the requirements of the RFB, County alone will determine whether the variance is so significant as to render the Bid non-responsive, or whether the variance may be cured by the Bidders or waived by the County, such that the Bid may be considered for award.

C. Ambiguity: Any ambiguity in the Bid as a result of omission, error, lack of clarity or non- compliance by the Bidders with specifications, instructions and all conditions shall be construed in the favor of the County. In the event of a conflict between these standard RFB requirements and details provided in Appendix A – Scope of Services or Appendix B – Bid, the Appendices shall prevail.

D. Controlling Document: In the case of a discrepancy between this solicitation and the formal contract, the formal contract will prevail and control.

E. Unit based price Prices and Extensions: If unit based prices and their extensions do not coincide, the County may accept the price most beneficial to the County, and the Bidders will be bound thereby.

F. Firm Prices: Unless otherwise stated in the specifications, Bidder's prices remain firm for 90 days from date of Bid opening and, upon award, remain in effect for the contract period specified in the solicitation. If formal award has not occurred within 90 days of Bid opening, the CONTRACTORand the County may mutually agree to extend the firm price period.

G. Additional Information: County may request any other information necessary to determine Bidder's ability to meet the minimum standards required by this RFB.

H. Partial Contract Award: County reserves the right to award one contract for some or all the requirements proposed or award multiple contracts for various portions of the requirements to different Bidder based on the unit prices proposed in response to this request, or to reject any and all Bids and re-solicit for Bids, as deemed to be in the best interest of County.

I. Debarment: The selected Bidders must **NOT** be debarred from any federal and/or state agency and Bastrop County will conduct a review of the Bidder's status on SAM.Gov. The Bastrop County Commissioners' Court will make the final selection and award. The County has the right to reject any and/or all Responses.

****THE REMAINDER OF THIS PAGE LEFT BLANK INTENTIONALLY****

Appendix A – Scope of Services

Project Title: Hall Road Drainage Improvement Project - DR-4232-0072

1. **Scope of Services Contact:**

   Questions about the technical nature of the Scope of Services, etc. may be directed to Bastrop County Purchasing Agent, Leon Scaife through e-mail at leon.scaife@co.bastrop.tx.us

2. **Bid Evaluation Factors:**

Bid Price	Factor
Lump Sum	Cost to complete all work within Appendix A (to include the cost of insurance and bonds)

3. **Key Events Schedule:**

Bid Release Date	September 17, 2025
Deadline for Submittal of Written Questions	5 PM, October 10, 2025
MANDATORY Pre-Bid Meeting	10AM, October 10, 2025
Sealed Bids Due to and Opened by County	2 PM, October 16, 2025
Anticipated Award Date	October 2025

4. **Scope of Services:**

   Project Overview:

   Bastrop County is requesting bids for the removal of an existing low water crossing on Hall Road (Latitude 30.00836, Longitude - 97.25871) and the construction of Two (2) 8ft x 6ft cast in place box culverts that are 26ft in length. The bid will also include Four (4) 12ft long parallel wing walls at a 45-degree skew on the upstream and downstream side of Hall Road. Hall Road, an unpaved road, originates at Young Road and continues South/Southwest for approximately 1 mile. Where Hall Road crosses the tributary is a low water crossing without any sub-surface drainage structure. The low water crossing is partially lined with concrete and is inundated frequently by any significant rain event. The purpose of this project is to improve drainage and alleviate flooding at the low water crossing on Hall Road, by removing and replacing the existing crossing with a larger set of culverts capable of handling a 100-year storm event.

   The complete list of all required tasks for this project are listed in the "Plans of Proposed Hall Road Drainage Improvement" document that starts on page 10 of this request for bids document.

****THE REMAINDER OF THIS PAGE LEFT BLANK INTENTIONALLY****

BID SHEET - RFB 25BCP08B

Project Costs	Unit Qty	Unit of Measure	Unit Cost	Cost Estimate
Multibox Culvert (2 - 8'x6")	74	LF		
Multibox Culvert (2 - 8' x 6') extensions	16	LF		
Wing Walls (12' in Length)	4	EA		
Excavation	170	CY		
Embankment/Select Fill	700	TON		
Road Base/Flex Base	200	TON		
Rock Rip Rap (8")	60	TON		
Removal of Existing Concrete	45	CY		
Temporary Erosion Control	1	EA		
Barricades, Signs, & Traffic Handling	1	MO		
Mobilization	1	EA		
COST OF BONDS (PAYMENT / PERFORMANCE)	1 or 2 (Depending Upon Cost of Project)	EA		

Total Project Costs $

ESTIMATED # OF DAYS TO COMPLETE THE PROJECT	Days	#

AVAILABLE START DATE: _____(Day) _____(Month), 2025

_____ _____

Authorized Signatory: **Date:**

County of Bastrop

State of Texas

Plans of Proposed
Hall Road Drainage Improvement

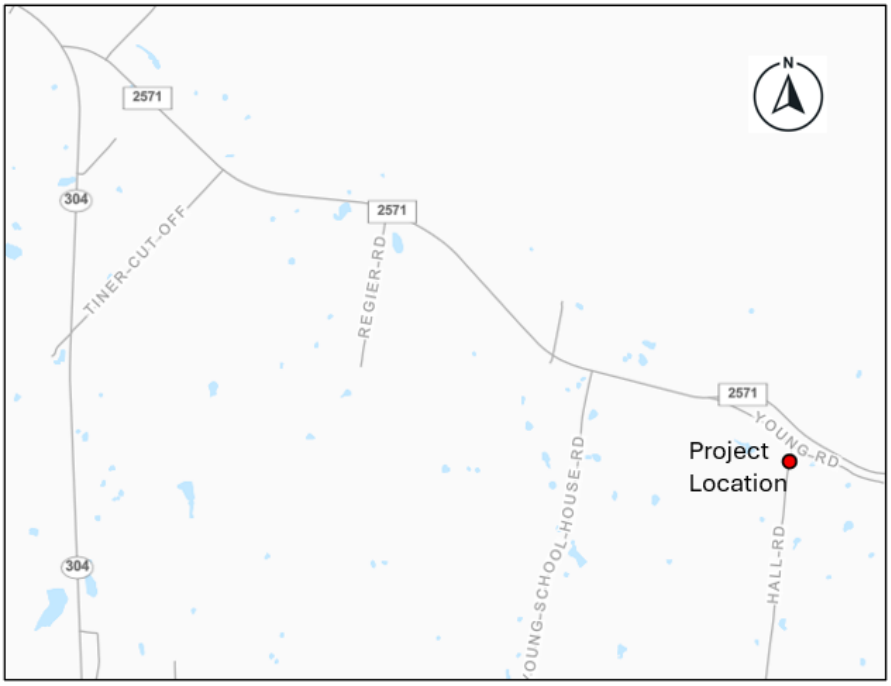

Index of Sheets

Page	Description
1	Location Map
2	Topographic Location Map
3-6	Scope of Work and General Notes
7	Layout

<u>Standard Sheets Below</u>

8-19	BC-21 Barricade and Construction Standards
20	EC(1)-6
21	EC(2)-6
22	EC(3)-6
23	MC-MD Multiple Box Culverts Cast-in-Place Miscellaneous Details
24-25	MC-8-13 - Multiple Box Culverts Cast-in-Place 8'-0" Span 0'-13' Fill
26	PW – Concrete Wingwalls with Parallel Wings for Box Culverts
27-28	SRR Stone Riprap

The TxDOT Standard Sheets have been selected by me or under my responsible supervision as being applicable to this project.

Carolyn Dill, P.E.

October 7, 2024

Hall Road Location Map

Hall Road originates at Young Road and continues South/Southwest for approximately 1 mile. The road is an unpaved road. There is a low water crossing without any sub-surface drainage structure where Hall Road crosses an unnamed tributary. The low water crossing is partially lined with concrete and is inundated frequently by any significant rain event.

The existing crossing will be removed and replaced with a set of box culverts, capable of handling a 100-year storm event. The new crossing would include two 8ft x 6ft box culverts with 12' wingwalls. The wing walls will be installed upstream and downstream of the culvert to protect the roadway.

Scope of Work

1. Contractor to Excavate to 6” below bottom of concrete elevation and Demo existing concrete low water crossing.
2. Place, compact and backfill with 6” road base to bottom of new concrete elevation.
3. Contractor to Construct 2 – Barrel 8’ Span x 6’ Height cast-in-place Box Culvert x 26’-0” in length (out-to-out of headwall Roadway Width) with 4 - 12’ long Parallel Wing Walls at 45 Degree Skew per TxDot Standard Multiple Box Culverts Drawings listed below:
   a) MC-MD – Multiple Box Culverts Cast-in-place Miscellaneous Details – Plan of Skewed Ends – Over 30 degrees to 45 degrees
   b) MC-8-13 - Multiple Box Culverts Cast-in-place 8’ Span 0’-13’ Fill
   c) PW – Concrete Wingwalls with Parallel Wings for Box Culverts TYPE PW-1
4. Bastrop County will provide Flow-Line elevation benchmark.
5. Bastrop County will locate Upstream Centerline of Boxes.
6. Contractor to excavate to 6’ below grade and backfill with 6” flex-base.
7. The Box Culvert and Wingwalls must be constructed ½ at a time to allow for traffic to remain live. This is a one way in and one way out dead-end road.
8. Contractor to provide, place and compact backfill in 6” lifts maximum for roadway and backside slopes to within 10” of Top of Box with select fill.
9. Contractor to provide, place and compact 10” of road base in 6” lifts maximum, per TxDOT Item #247 to top of box elevation.
10. Curb Height is 0”
11. Provide and place embedded 1/2” Metal Plate 6” x 6” with 4-stud anchors along Headwall and Box for guardrail placement (by others) 5 evenly spread on Each side of box, 10 Total.
12. Contractor to provide and place 2 layers of 8” diameter limestone rock Rip Rap as directed by the county.

13. The Contractor shall employ and pay for an independent testing laboratory acceptable to the Owner and Engineer for the purposes of performing field and laboratory material evaluation tests including any retesting of defective or rejected materials and materials for replacement that may be required by the Owner.

GENERAL NOTES

A MANDATORY PRE-BID MEETING WILL BE HELD ON SITE.

TxDOT's 2014 Standard Specifications for Construction and Maintenance of Highways, Streets, and Bridges is incorporated by reference.

Remove and replace, at the Contractor's expense, and as directed, all defective work, which was caused by the Contractor's workforce, materials, or equipment.
Perform work during good weather unless otherwise directed. If work is performed at Contractor's option, when inclement weather is impending, and the work is damaged by subsequent precipitation, the Contractor is responsible for all costs associated with replacing the work, if required.

Overhead and underground utilities may exist in the vicinity of the project. The exact location of underground utilities is not known.

If working near power lines, comply with the appropriate sections of Local Legal Requirements, Texas State Law, and Federal Regulations relating to the type of work involved.

In the event of unforeseen utility adjustment, the Contractor will prosecute their work in such a manner and sequence as to facilitate the adjustments to be made. If in the opinion of the County, the Contractor is delayed by virtue of the adjustment of these utilities, an extension of working time may be granted, if necessary.

Match existing cross slopes, as directed. Consider subsidiary to the pertinent items.

Sweep, mow, and remove all litter on the right of way, within the project limits, to keep the jobsite in a neat and presentable condition at all times. Perform this work as directed.

Remove all construction debris and surplus material generated by the construction work within the project limits. Perform this work as directed. Consider subsidiary to the pertinent its.

The Project Superintendent will be available for contact at all times when work is being performed, including subcontractor work. The Superintendent will be available and on-call 24 hours a day.

Final cleanup will include the removal of excess material considered detrimental to vegetation growth along the front slope of the ditch. Materials such as surface aggregates and other materials, as specified by the County, will be removed at the Contractor's expense.

TEMPORARY EROSION, SEDIMENTATION CONTROL NOTES

Obtain the County's approval for proposed methods used for erosion control before starting each phase of the construction.
Contractor to place erosion controls prior to construction commencement in accordance with the plans and remove all erosion controls only after construction completion.

Double-bag all sandbags used for erosion control items. Consider subsidiary to pertinent items.

USACE PERMITTING REQUIREMENTS
Permit Requirements:

This project is <u>not</u> in the jurisdictional Waters of the United States and will not require authorization or permitting under Section 404 of the Clean Water Act.

This project is <u>not</u> located with a designated FEMA Flood Plain per Panel #48021C0375F dated 05/09/2023.

TRAFFIC CONTROL NOTES

Within the limits of the project, provide standard barricades, warning signs, delineator lights, 28-inch cones, and flaggers in enough numbers and combinations, as directed.

Maintain access to all streets and driveways at all times, unless otherwise approved. Consider subsidiary to the pertinent items.

Cover or remove any existing sign(s), which conflict with temporary traffic control operations. Install all permanent signs, delineation, and object markers necessary to the operation of any roadway before opening that section of roadway to traffic, regardless of the phase during which the roadway construction occurs. Erect the signs on temporary mounts until the permanent mounts are installed. Consider any costs associated with the temporary mounts subsidiary. Repair or replace any signs, which are damaged by the Contractor's operations during construction or which are deemed not sufficient. The County will be the sole judge of the adequacy of the sign(s). Consider this work subsidiary to the pertinent items.

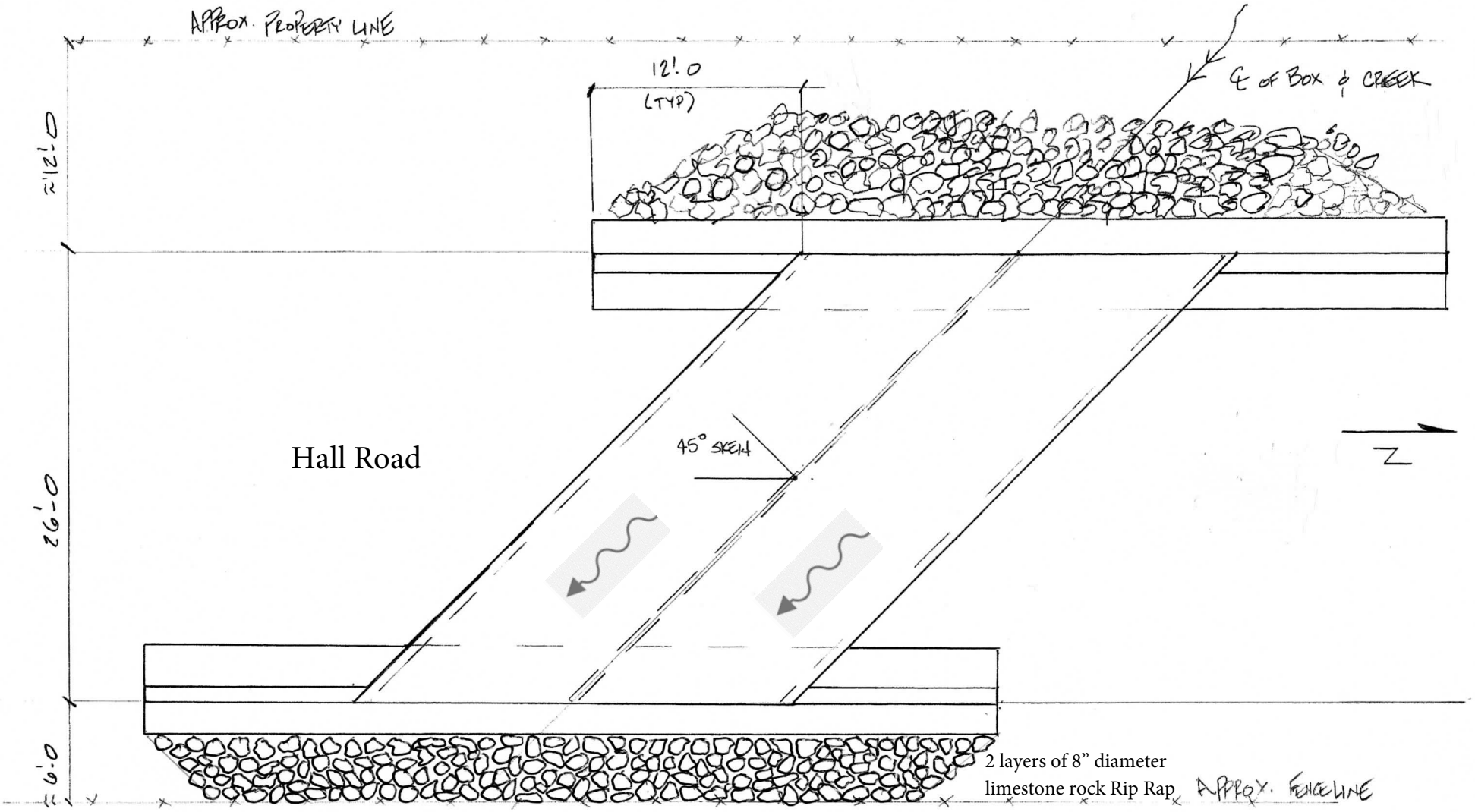

LAYOUT - 2-8' SPAN x 6' HGT. BOX CULVERT

1. Bastrop County will provide Flow-Line elevation benchmark.
2. Bastrop County will locate Upstream Centerline of Boxes.

DISCLAIMER:
The use of this standard is governed by the "Texas Engineering Practice Act". No warranty of any kind is made by TxDOT for any purpose whatsoever. TxDOT assumes no responsibility for the conversion of this standard to other formats or for incorrect results or damages resulting from its use.

BARRICADE AND CONSTRUCTION (BC) STANDARD SHEETS GENERAL NOTES:

1. The Barricade and Construction Standard Sheets (BC sheets) are intended to show typical examples for placement of temporary traffic control devices, construction pavement markings, and typical work zone signs. The information contained in these sheets meet or exceed the requirements shown in the "Texas Manual on Uniform Traffic Control Devices" (TMUTCD).

2. The development and design of the Traffic Control Plan (TCP)is the responsibility of the Engineer.

3. The Contractor may propose changes to the TCP that are signed and sealed by a licensed professional engineer for approval. The Engineer may develop, sign and seal Contractor proposed changes.

4. The Contractor is responsible for installing and maintaining the traffic control devices as shown in the plans. The Contractor may not move or change the approximate location of any device without the approval of the Engineer.

5. Geometric design of lane shifts and detours should, when possible, meet the applicable design criteria contained in manuals such as the American Association of State Highway and Transportation Officials (AASHTO), "A Policy on Geometric Design of Highways and Streets," the TxDOT "Roadway Design Manual" or engineering judgment.

6. When projects abut, the Engineer(s) may omit the END ROAD WORK, TRAFFIC FINES DOUBLE, and other advance warning signs if the signing would be redundant and the work areas appear continuous to the motorists. If the adjacent project is completed first, the Contractor shall erect the necessary warning signs as shown on these sheets, the TCP sheets or as directed by the Engineer. The BEGIN ROAD WORK NEXT X MILES sign shall be revised to show appropriate work zone distance.

7. The Engineer may require duplicate warning signs on the median side of divided highways where median width will permit and traffic volumes justify the signing.

8. All signs shall be constructed in accordance with the details found in the "Standard Highway Sign Designs for Texas," latest edition. Sign details not shown in this manual shall be shown in the plans or the Engineer shall provide a detail to the Contractor before the sign is manufactured.

9. The temporary traffic control devices shown in the illustrations of the BC sheets are examples. As necessary, the Engineer will determine the most appropriate traffic control devices to be used.

10. Where highway construction or maintenance work is being undertaken, other than mobile operations as defined by the Texas Manual on Uniform Traffic Control Devices, CSJ limit signs are required. CSJ limit signs are shown on BC(2). The OBEY WARNING SIGNS STATE LAW sign, STAY ALERT TALK OR TEXT LATER and the WORK ZONE TRAFFIC FINES DOUBLE sign with plaque shall be erected in advance of the CSJ limits. The BEGIN ROAD WORK NEXT X MILES, CONTRACTOR and END ROAD WORK signs shall be erected at or near the CSJ limits. For mobile operations, CSJ limit signs are not required.

11. Traffic control devices should be in place only while work is actually in progress or a definite need exists.

12. The Engineer has the final decision on the location of all traffic control devices.

13. Inactive equipment and work vehicles, including workers' private vehicles must be parked away from travel lanes. They should be as close to the right-of-way line as possible, or located behind a barrier or guardrail, or as approved by the Engineer.

WORKER SAFETY NOTES:

1. Workers on foot who are exposed to traffic or to construction equipment within the right-of-way shall wear high-visibility safety apparel meeting the requirements of ISEA "American National Standard for High-Visibility Apparel," or equivalent revisions, and labeled as ANSI 107-2004 standard performance for Class 2 or 3 risk exposure. Class 3 garments should be considered for high traffic volume work areas or night time work.

2. Except in emergency situations, flagger stations shall be illuminated when flagging is used at night.

COMPLIANT WORKZONE TRAFFIC CONTROL DEVICES

1. Only pre-qualified products shall be used. The "Compliant Work Zone Traffic Control Devices List" (CWZTCD) describes pre-qualified products and their sources.

2. Work zone traffic control devices shall be compliant with the Manual for Assessing safety Hardware (MASH).

THE DOCUMENTS BELOW CAN BE FOUND ON-LINE AT http://www.txdot.gov
COMPLIANT WORK ZONE TRAFFIC CONTROL DEVICES LIST (CWZTCD)
DEPARTMENTAL MATERIAL SPECIFICATIONS (DMS)
MATERIAL PRODUCER LIST (MPL)
ROADWAY DESIGN MANUAL - SEE "MANUALS (ONLINE MANUALS)"
STANDARD HIGHWAY SIGN DESIGNS FOR TEXAS (SHSD)
TEXAS MANUAL ON UNIFORM TRAFFIC CONTROL DEVICES (TMUTCD)
TRAFFIC ENGINEERING STANDARD SHEETS

Texas Department of Transportation

Traffic Safety Division Standard

BARRICADE AND CONSTRUCTION GENERAL NOTES AND REQUIREMENTS

BC(1)-21

FILE: bc-21.dgn	DN: TxDOT	CK: TxDOT	DW: TxDOT	CK: TxDOT
© TxDOT November 2002	CONT	SECT	JOB	HIGHWAY
REVISIONS 4-03 7-13 9-07 8-14 5-10 5-21	DIST	COUNTY		SHEET NO. 8

DATE:
FILE:

DISCLAIMER:
The use of this standard is governed by the "Texas Engineering Practice Act". No warranty of any kind is made by TxDOT for any purpose whatsoever. TxDOT assumes no responsibility for the conversion of this standard to other formats or for incorrect results or damages resulting from its use.

TYPICAL LOCATION OF CROSSROAD SIGNS

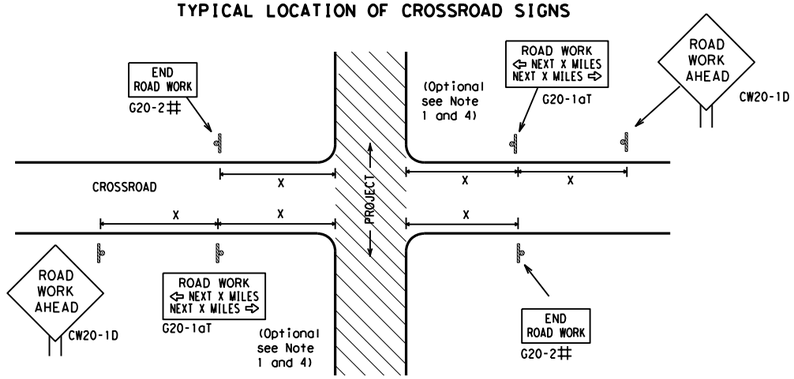

May be mounted on back of "ROAD WORK AHEAD"(CW20-1D) sign with approval of Engineer. (See note 2 below)

1. The typical minimum signing on a crossroad approach should be a "ROAD WORK AHEAD" (CW20-1D)sign and a (G20-2) "END ROAD WORK" sign, unless noted otherwise in plans.
2. The Engineer may use the reduced size 36" x 36" ROAD WORK AHEAD (CW20-1D) sign mounted back to back with the reduced size 36" x 18" "END ROAD WORK"(G20-2) sign on low volume crossroads (see Note 4 under "Typical Construction Warning Sign Size and Spacing"). See the "Standard Highway Sign Designs for Texas" manual for sign details. The Engineer may omit the advance warning signs on low volume crossroads. The Engineer will determine whether a road is low volume as per TMUTCD Part 5. This information shall be shown in the plans.
3. Based on existing field conditions, the Engineer/Inspector may require additional signs such as FLAGGER AHEAD, LOOSE GRAVEL, or other appropriate signs. When additional signs are required, these signs will be considered part of the minimum requirements. The Engineer/Inspector will determine the proper location and spacing of any sign not shown on the BC sheets, Traffic Control Plan sheets or the Work Zone Standard Sheets.
4. The "ROAD WORK NEXT X MILES"(G20-1aT)sign shall be required at high volume crossroads to advise motorists of the length of construction in either direction from the intersection. The Engineer will determine whether a roadway is considered high volume.
5. Additional traffic control devices may be shown elsewhere in the plans for higher volume crossroads.
6. When work occurs in the intersection area, appropriate traffic control devices, as shown elsewhere in the plans or as determined by the Engineer/Inspector, shall be in place.

T-INTERSECTION

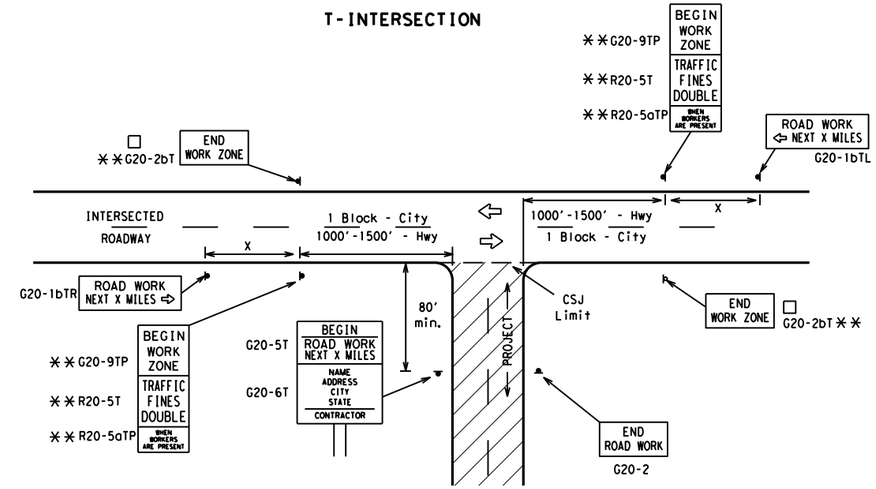

CSJ LIMITS AT T-INTERSECTION

1. The Engineer will determine the types and location of any additional traffic control devices, such as a flagger and accompanying signs, or other signs, that should be used when work is being performed at or near an intersection.
2. If construction closes the road at a T-intersection, the Contractor shall place the "CONTRACTOR NAME"(G20-6T) sign behind the Type 3 Barricades for the road closure (see BC(10) also). The "ROAD WORK NEXT X MILES" left arrow(G20-1bTL) and "ROAD WORK NEXT X MILES" right arrow (G20-1bTR)" signs shall be replaced by the detour signing called for in the plans.

TYPICAL CONSTRUCTION WARNING SIGN SIZE AND SPACING[1,5,6]

SIZE

Sign Number or Series	Conventional Road	Expressway/ Freeway
CW20[4] CW21 CW22 CW23 CW25	48" x 48"	48" x 48"
CW1, CW2, CW7, CW8, CW9, CW11, CW14	36" x 36"	48" x 48"
CW3, CW4, CW5, CW6, CW8-3, CW10, CW12	48" x 48"	48" x 48"

SPACING

Posted Speed	Sign △ Spacing "X"
MPH	Feet (Apprx.)
30	120
35	160
40	240
45	320
50	400
55	500[2]
60	600[2]
65	700[2]
70	800[2]
75	900[2]
80	1000[2]
✱	✱[3]

✱ For typical sign spacings on divided highways, expressways and freeways, see Part 6 of the "Texas Manual on Uniform Traffic Control Devices" (TMUTCD) typical application diagrams or TCP Standard Sheets.

△ Minimum distance from work area to first Advance Warning sign nearest the work area and/or distance between each additional sign.

GENERAL NOTES

1. Special or larger size signs may be used as necessary.
2. Distance between signs should be increased as required to have 1500 feet advance warning.
3. Distance between signs should be increased as required to have 1/2 mile or more advance warning.
4. 36" x 36" "ROAD WORK AHEAD" (CW20-1D)signs may be used on low volume crossroads at the discretion of the Engineer as per TMUTCD Part 5. See Note 2 under "Typical Location of Crossroad Signs".
5. Only diamond shaped warning sign sizes are indicated.
6. See sign size listing in "TMUTCD", Sign Appendix or the "Standard Highway Sign Designs for Texas" manual for complete list of available sign design sizes.

WORK AREAS IN MULTIPLE LOCATIONS WITHIN CSJ LIMITS

SAMPLE LAYOUT OF SIGNING FOR WORK BEGINNING AT THE CSJ LIMITS

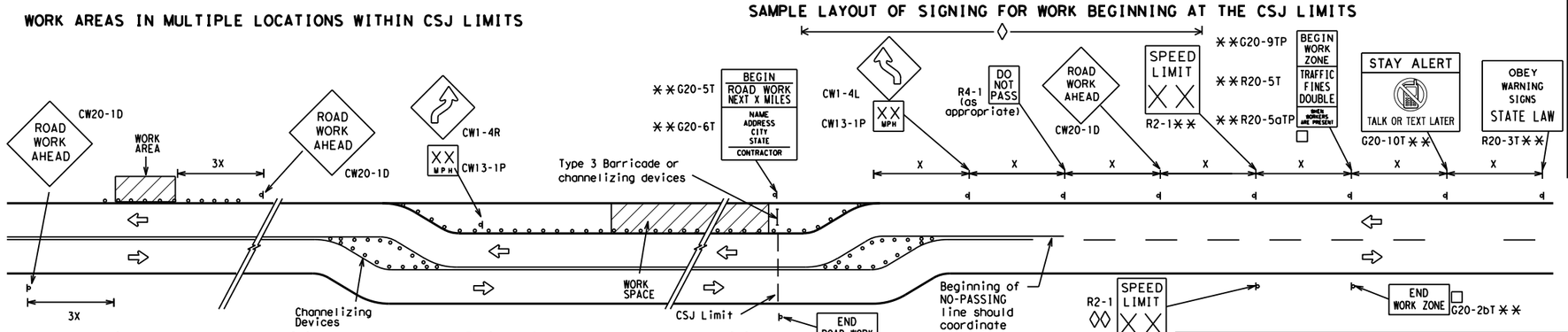

When extended distances occur between minimal work spaces, the Engineer/Inspector should ensure additional "ROAD WORK AHEAD"(CW20-1D)signs are placed in advance of these work areas to remind drivers they are still within the project limits. See the applicable TCP sheets for exact location and spacing of signs and channelizing devices.

SAMPLE LAYOUT OF SIGNING FOR WORK BEGINNING DOWNSTREAM OF THE CSJ LIMITS

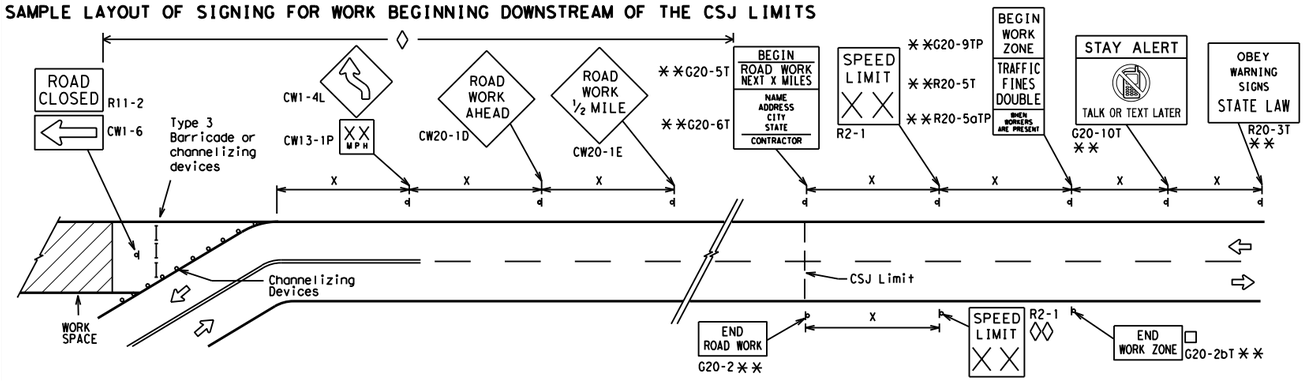

NOTES

The Contractor shall determine the appropriate distance to be placed on the G20-1 series signs and "BEGIN ROAD WORK NEXT X MILES"(G20-5T)sign for each specific project. This distance shall replace the "X" and shall be rounded to the nearest whole mile with the approval of the Engineer. No decimals shall be used.

□ The "BEGIN WORK ZONE"(G20-9TP) and "END WORK ZONE" (G20-2bT) shall be used as shown on the sample layout when advance signs are required outside the CSJ Limits. They inform the motorist of entering or leaving a part of the work zone lying outside the CSJ Limits where traffic fines may double if workers are present.

✱✱ CSJ limit signing is required for highway construction and maintenance work, with the exception of mobile operations.

◊ Area for placement of "ROAD WORK AHEAD" (CW20-1D)sign and other signs or devices as called for on the Traffic Control Plan.

◊◊ Contractor will install a regulatory speed limit sign at the end of the work zone.

LEGEND	
⊢⊣	Type 3 Barricade
○ ○ ○	Channelizing Devices
▬	Sign
X	See Typical Construction Warning Sign Size and Spacing chart or the TMUTCD for sign spacing requirements.

SHEET 2 OF 12

Texas Department of Transportation — Traffic Safety Division Standard

BARRICADE AND CONSTRUCTION PROJECT LIMIT

BC(2)-21

FILE: bc-21.dgn	DN: TxDOT	CK: TxDOT	DW: TxDOT	CK: TxDOT
© TxDOT November 2002	CONT	SECT	JOB	HIGHWAY
REVISIONS 9-07 8-14 7-13 5-21	DIST	COUNTY		SHEET NO. 9

DATE:
FILE:

TYPICAL APPLICATION OF WORK ZONE SPEED LIMIT SIGNS

Work zone speed limits shall be regulatory, established in accordance with the "Procedures for Establishing Speed Zones," and approved by the Texas Transportation Commission, or by City Ordinance when within Incorporated City Limits.

Reduced speeds should only be posted in the vicinity of work activity and not throughout the entire project.

Regulatory work zone speed signs (R2-1) shall be removed or covered during periods when they are not needed.

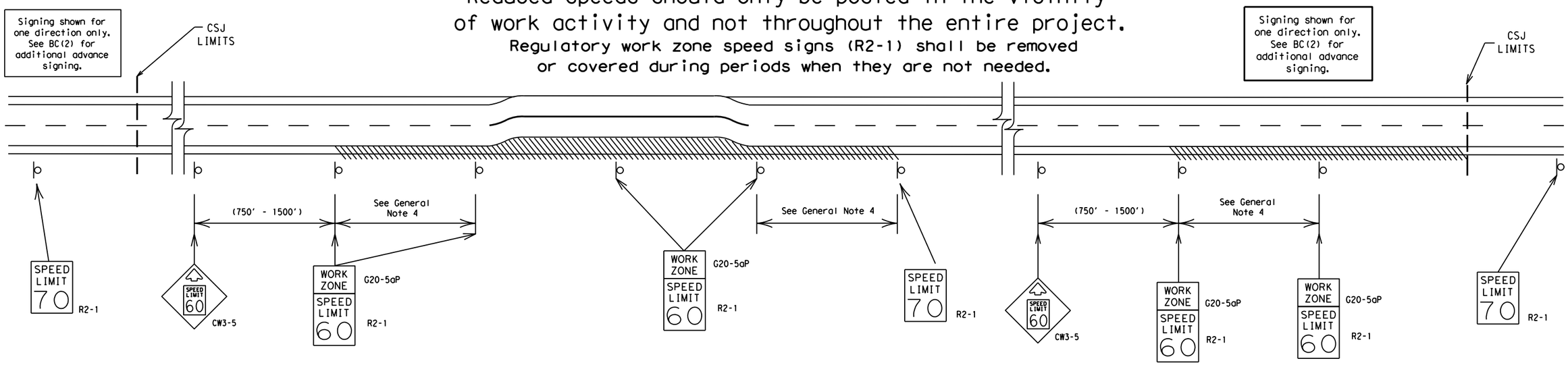

GUIDANCE FOR USE:

LONG/INTERMEDIATE TERM WORK ZONE SPEED LIMITS

This type of work zone speed limit should be included on the design of the traffic control plans when restricted geometrics with a lower design speed are present in the work zone and modification of the geometrics to a higher design speed is not feasible.

Long/Intermediate Term Work Zone Speed Limit signs, when approved as described above, should be posted and visible to the motorist when work activity is present. Work activity may also be defined as a change in the roadway that requires a reduced speed for motorists to safely negotiate the work area, including:

a) rough road or damaged pavement surface
b) substantial alteration of roadway geometrics (diversions)
c) construction detours
d) grade
e) width
f) other conditions readily apparent to the driver

As long as any of these conditions exist, the work zone speed limit signs should remain in place.

SHORT TERM WORK ZONE SPEED LIMITS

This type of work zone speed limit may be included on the design of the traffic control plans when workers or equipment are not behind concrete barrier, when work activity is within 10 feet of the traveled way or actually in the traveled way.

Short Term Work Zone Speed Limit signs should be posted and visible to the motorists only when work activity is present. When work activity is not present, signs shall be removed or covered.
(See Removing or Covering on BC(4)).

GENERAL NOTES

1. Regulatory work zone speed limits should be used only for sections of construction projects where speed control is of major importance.
2. Regulatory work zone speed limit signs shall be placed on supports at a 7 foot minimum mounting height.
3. Speed zone signs are illustrated for one direction of travel and are normally posted for each direction of travel.
4. Frequency of work zone speed limit signs should be:
   40 mph and greater 0.2 to 2 miles
   35 mph and less 0.2 to 1 mile
5. Regulatory speed limit signs shall have black legend and border on a white reflective background (See "Reflective Sheeting" on BC(4)).
6. Fabrication, erection and maintenance of the"ADVANCE SPEED LIMIT"(CW3-5)sign, "WORK ZONE"(G20-5aP) plaque and the "SPEED LIMIT"(R2-1)signs shall not be paid for directly, but shall be considered subsidiary to Item 502.
7. Turning signs from view, laying signs over or down will not be allowed, unless as otherwise noted under "REMOVING OR COVERING" on BC(4).
8. Techniques that may help reduce traffic speeds include but are not limited to:
   A. Law enforcement.
   B. Flagger stationed next to sign.
   C. Portable changeable message sign (PCMS).
   D. Low-power (drone) radar transmitter.
   E. Speed monitor trailers or signs.
9. Speeds shown on details above are for illustration only.
   Work Zone Speed Limits should only be posted as approved for each project.
10. For more specific guidance concerning the type of work, work zone conditions and factors impacting allowable regulatory construction speed zone reduction see TxDOT form #1204 in the TxDOT e-form system.

DISCLAIMER:
The use of this standard is governed by the "Texas Engineering Practice Act". No warranty of any kind is made by TxDOT for any purpose whatsoever. TxDOT assumes no responsibility for the conversion of this standard to other formats or for incorrect results or damages resulting from its use.

DATE:
FILE:

SHEET 3 OF 12

Texas Department of Transportation — Traffic Safety Division Standard

BARRICADE AND CONSTRUCTION WORK ZONE SPEED LIMIT

BC(3)-21

FILE: bc-21.dgn	DN: TxDOT	CK: TxDOT	DW: TxDOT	CK: TxDOT
©TxDOT November 2002	CONT	SECT	JOB	HIGHWAY
REVISIONS 9-07 8-14 7-13 5-21	DIST	COUNTY		SHEET NO. 10

97

TYPICAL MINIMUM CLEARANCES FOR LONG TERM AND INTERMEDIATE TERM SIGNS

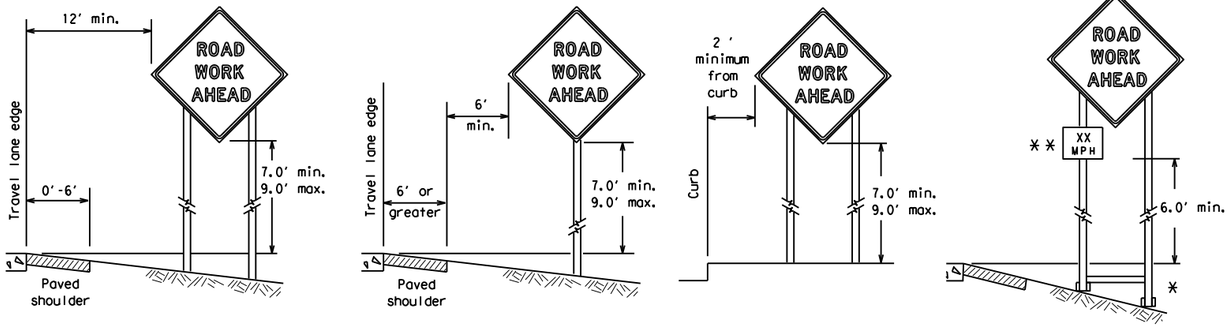

✱ When placing skid supports on unlevel ground, the leg post lengths must be adjusted so the sign appears straight and plumb. Objects shall NOT be placed under skids as a means of leveling.

✱✱ When plaques are placed on dual-leg supports, they should be attached to the upright nearest the travel lane. Supplemental plaques (advisory or distance) should not cover the surface of the parent sign.

ATTACHMENT FOR SIGN SUPPORTS

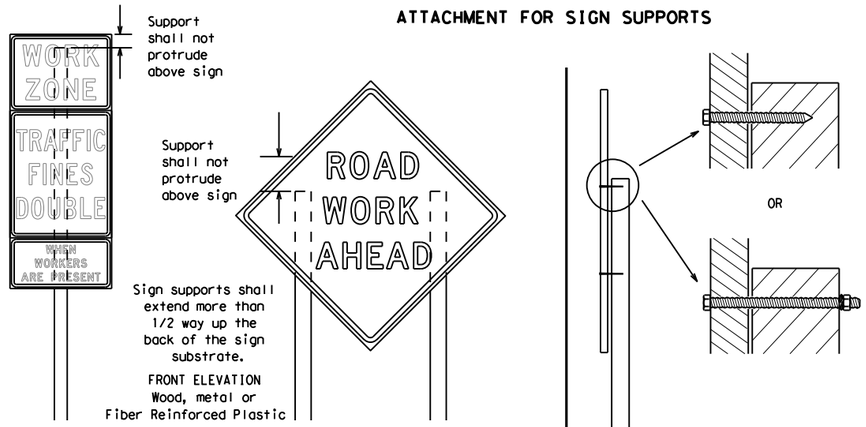

Attachment to wooden supports will be by bolts and nuts or screws. Use TxDOT's or manufacturer's recommended procedures for attaching sign substrates to other types of sign supports

Nails shall NOT be allowed. Each sign shall be attached directly to the sign support. Multiple signs shall not be joined or spliced by any means. Wood supports shall not be extended or repaired by splicing or other means.

Splicing embedded perforated square metal tubing in order to extend post height will only be allowed when the splice is made using four bolts, two above and two below the spice point. Splice must be located entirely behind the sign substrate, not near the base of the support. Splice insert lengths should be at least 5 times nominal post size, centered on the splice and of at least the same gauge material.

STOP/SLOW PADDLES

1. STOP/SLOW paddles are the primary method to control traffic by flaggers. The STOP/SLOW paddle size should be 24" x 24".
2. STOP/SLOW paddles shall be retroreflectorized when used at night.
3. STOP/SLOW paddles may be attached to a staff with a minimum length of 6' to the bottom of the sign.
4. Any lights incorporated into the STOP or SLOW paddle faces shall only be as specifically described in Section 6E.03 Hand Signaling Devices in the TMUTCD.

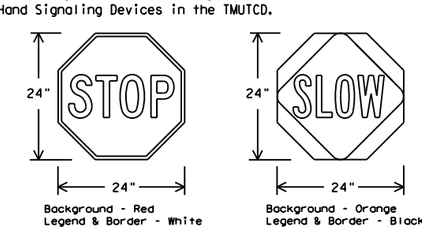

SHEETING REQUIREMENTS (WHEN USED AT NIGHT)		
USAGE	COLOR	SIGN FACE MATERIAL
BACKGROUND	RED	TYPE B OR C SHEETING
BACKGROUND	ORANGE	TYPE B_{FL} OR C_{FL} SHEETING
LEGEND & BORDER	WHITE	TYPE B OR C SHEETING
LEGEND & BORDER	BLACK	ACRYLIC NON-REFLECTIVE FILM

CONTRACTOR REQUIREMENTS FOR MAINTAINING PERMANENT SIGNS WITHIN THE PROJECT LIMITS

1. Permanent signs are used to give notice of traffic laws or regulations, call attention to conditions that are potentially hazardous to traffic operations, show route designations, destinations, directions, distances, services, points of interest, and other geographical, recreational, specific service (LOGO), or cultural information. Drivers proceeding through a work zone need the same, if not better route guidance as normally installed on a roadway without construction.
2. When permanent regulatory or warning signs conflict with work zone conditions, remove or cover the permanent signs until the permanent sign message matches the roadway condition. For details for covering large guide signs see the TS-CD standard.
3. When existing permanent signs are moved and relocated due to construction purposes, they shall be visible to motorists at all times.
4. If existing signs are to be relocated on their original supports, they shall be installed on crashworthy bases as shown on the SMD Standard sheets. The signs shall meet the required mounting heights shown on the BC Sheets or the SMD Standards. This work should be paid for under the appropriate pay item for relocating existing signs.
5. If permanent signs are to be removed and relocated using temporary supports, the Contractor shall use crashworthy supports as shown on the BC standard sheets, TLRS standard sheets or the CWZTCD list. The signs shall meet the required mounting heights shown on the BC, or the SMD standard sheets during construction. This work should be paid for under the appropriate pay item for relocating existing signs.
6. Any sign or traffic control device that is struck or damaged by the Contractor or his/her construction equipment shall be replaced as soon as possible by the Contractor to ensure proper guidance for the motorists. This will be subsidiary to Item 502.

GENERAL NOTES FOR WORK ZONE SIGNS

1. Contractor shall install and maintain signs in a straight and plumb condition and/or as directed by the Engineer.
2. Wooden sign posts shall be painted white.
3. Barricades shall NOT be used as sign supports.
4. All signs shall be installed in accordance with the plans or as directed by the Engineer. Signs shall be used to regulate, warn, and guide the traveling public safely through the work zone.
5. The Contractor may furnish either the sign design shown in the plans or in the "Standard Highway Sign Designs for Texas" (SHSD). The Engineer/Inspector may require the Contractor to furnish other work zone signs that are shown in the TMUTCD but may have been omitted from the plans. Any variation in the plans shall be documented by written agreement between the Engineer and the Contractor's Responsible Person. All changes must be documented in writing before being implemented. This can include documenting the changes in the Inspector's TxDOT diary and having both the Inspector and Contractor initial and date the agreed upon changes.
6. The Contractor shall furnish sign supports listed in the "Compliant Work Zone Traffic Control Device List" (CWZTCD) for small roadside signs. Supports for temporary large roadside signs shall meet the requirements detailed on the Temporary Large Roadside Signs (TLRS) standard sheets. The Contractor shall install the sign support in accordance with the manufacturer's recommendations. If there is a question regarding installation procedures, the Contractor shall furnish the Engineer a copy of the manufacturer's installation recommendations so the Engineer can verify the correct procedures are being followed.
7. The Contractor is responsible for installing signs on approved supports and replacing signs with damaged or cracked substrates and/or damaged or marred reflective sheeting as directed by the Engineer/Inspector.
8. Identification markings may be shown only on the back of the sign substrate. The maximum height of letters and/or company logos used for identification shall be 1 inch.
9. The Contractor shall replace damaged wood posts. New or damaged wood sign posts shall not be spliced.

DURATION OF WORK (as defined by the "Texas Manual on Uniform Traffic Control Devices" Part 6)

1. The types of sign supports, sign mounting height, the size of signs, and the type of sign substrates can vary based on the type of work being performed. The Engineer is responsible for selecting the appropriate size sign for the type of work being performed. The Contractor is responsible for ensuring the sign support, sign mounting height and substrate meets manufacturer's recommendations in regard to crashworthiness and duration of work requirements.
   a. Long-term stationary - work that occupies a location more than 3 days.
   b. Intermediate-term stationary - work that occupies a location more than one daylight period up to 3 days, or nighttime work lasting more than one hour.
   c. Short-term stationary - daytime work that occupies a location for more than 1 hour in a single daylight period.
   d. Short, duration - work that occupies a location up to 1 hour.
   e. Mobile - work that moves continuously or intermittently (stopping for up to approximately 15 minutes.)

SIGN MOUNTING HEIGHT

1. The bottom of Long-term/Intermediate-term signs shall be at least 7 feet, but not more than 9 feet, above the paved surface, except as shown for supplemental plaques mounted below other signs.
2. The bottom of Short-term/Short Duration signs shall be a minimum of 1 foot above the pavement surface but no more than 2 feet above the ground.
3. Long-term/Intermediate-term Signs may be used in lieu of Short-term/Short Duration signing.
4. Short-term/Short Duration signs shall be used only during daylight and shall be removed at the end of the workday or raised to appropriate Long-term/Intermediate sign height.
5. Regulatory signs shall be mounted at least 7 feet, but not more than 9 feet, above the paved surface regardless of work duration.

SIZE OF SIGNS

1. The Contractor shall furnish the sign sizes shown on BC (2) unless otherwise shown in the plans or as directed by the Engineer.

SIGN SUBSTRATES

1. The Contractor shall ensure the sign substrate is installed in accordance with the manufacturer's recommendations for the type of sign support that is being used. The CWZTCD lists each substrate that can be used on the different types and models of sign supports.
2. "Mesh" type materials are NOT an approved sign substrate, regardless of the tightness of the weave.
3. All wooden individual sign panels fabricated from 2 or more pieces shall have one or more plywood cleat, 1/2" thick by 6" wide, fastened to the back of the sign and extending fully across the sign. The cleat shall be attached to the back of the sign using wood screws that do not penetrate the face of the sign panel. The screws shall be placed on both sides of the splice and spaced at 6" centers. The Engineer may approve other methods of splicing the sign face.

REFLECTIVE SHEETING

1. All signs shall be retroreflective and constructed of sheeting meeting the color and retro-reflectivity requirements of DMS-8300 for rigid signs or DMS-8310 for roll-up signs. The web address for DMS specifications is shown on BC(1).
2. White sheeting, meeting the requirements of DMS-8300 Type A, shall be used for signs with a white background.
3. Orange sheeting, meeting the requirements of DMS-8300 Type B_{FL} or Type C_{FL}, shall be used for rigid signs with orange backgrounds.

SIGN LETTERS

1. All sign letters and numbers shall be clear, and open rounded type uppercase alphabet letters as approved by the Federal Highway Administration (FHWA) and as published in the "Standard Highway Sign Design for Texas" manual. Signs, letters and numbers shall be of first class workmanship in accordance with Department Standards and Specifications.

REMOVING OR COVERING

1. When sign messages may be confusing or do not apply, the signs shall be removed or completely covered.
2. Long-term stationary or intermediate stationary signs installed on square metal tubing may be turned away from traffic 90 degrees when the sign message is not applicable. This technique may not be used for signs installed in the median of divided highways or near any intersections where the sign may be seen from approaching traffic.
3. Signs installed on wooden skids shall not be turned at 90 degree angles to the roadway. These signs should be removed or completely covered when not required.
4. When signs are covered, the material used shall be opaque, such as heavy mil black plastic, or other materials which will cover the entire sign face and maintain their opaque properties under automobile headlights at night, without damaging the sign sheeting.
5. Burlap shall NOT be used to cover signs.
6. Duct tape or other adhesive material shall NOT be affixed to a sign face.
7. Signs and anchor stubs shall be removed and holes backfilled upon completion of work.

SIGN SUPPORT WEIGHTS

1. Where sign supports require the use of weights to keep from turning over, the use of sandbags with dry, cohesionless sand should be used.
2. The sandbags will be tied shut to keep the sand from spilling and to maintain a constant weight.
3. Rock, concrete, iron, steel or other solid objects shall not be permitted for use as sign support weights.
4. Sandbags should weigh a minimum of 35 lbs and a maximum of 50 lbs.
5. Sandbags shall be made of a durable material that tears upon vehicular impact. Rubber (such as tire inner tubes) shall NOT be used.
6. Rubber ballasts designed for channelizing devices should not be used for ballast on portable sign supports. Sign supports designed and manufactured with rubber bases may be used when shown on the CWZTCD list.
7. Sandbags shall only be placed along or laid over the base supports of the traffic control device and shall not be suspended above ground level or hung with rope, wire, chains or other fasteners. Sandbags shall be placed along the length of the skids to weigh down the sign support.
8. Sandbags shall NOT be placed under the skid and shall not be used to level sign supports placed on slopes.

FLAGS ON SIGNS

1. Flags may be used to draw attention to warning signs. When used, the flag shall be 16 inches square or larger and shall be orange or fluorescent red-orange in color. Flags shall not be allowed to cover any portion of the sign face.

Texas Department of Transportation — Traffic Safety Division Standard

BARRICADE AND CONSTRUCTION TEMPORARY SIGN NOTES

BC(4)-21

FILE: bc-21.dgn	DN: TxDOT	CK: TxDOT	DW: TxDOT	CK: TxDOT
© TxDOT November 2002	CONT	SECT	JOB	HIGHWAY
REVISIONS 9-07 8-14, 7-13 5-21	DIST		COUNTY	SHEET NO. 11

DISCLAIMER:
The use of this standard is governed by the "Texas Engineering Practice Act". No warranty of any kind is made by TxDOT for any purpose whatsoever. TxDOT assumes no responsibility for the conversion of this standard to other formats or for incorrect results or damages resulting from its use.

DATE:
FILE:

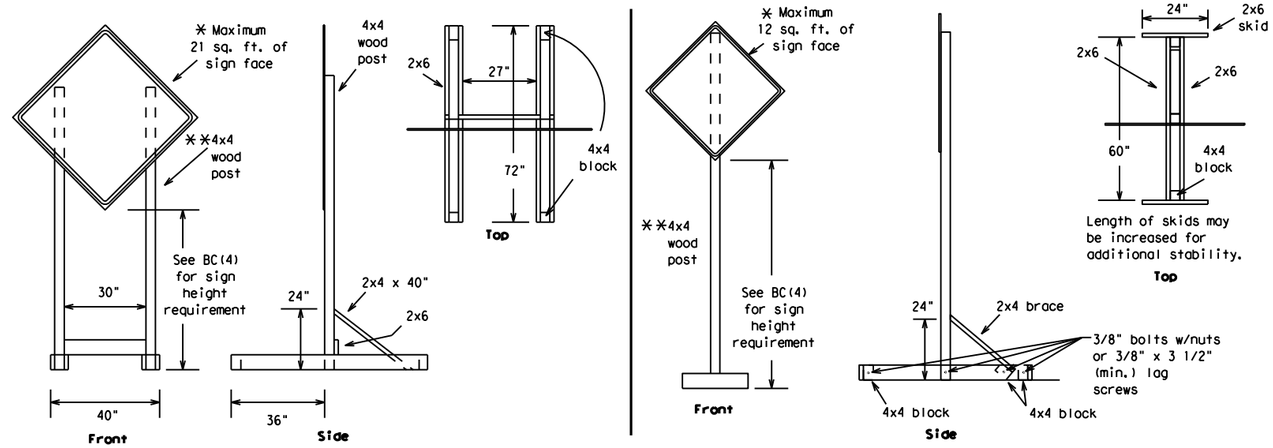

SKID MOUNTED WOOD SIGN SUPPORTS

* LONG/INTERMEDIATE TERM STATIONARY - PORTABLE SKID MOUNTED SIGN SUPPORTS

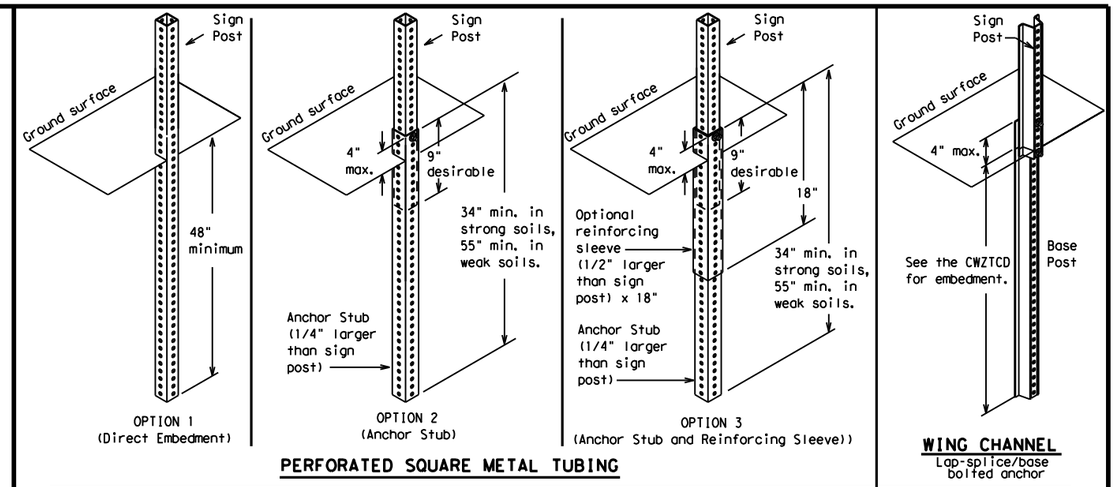

GROUND MOUNTED SIGN SUPPORTS

Refer to the CWZTCD and the manufacturer's installation procedure for each type sign support.
The maximum sign square footage shall adhere to the manufacturer's recommendation.
Two post installations can be used for larger signs.

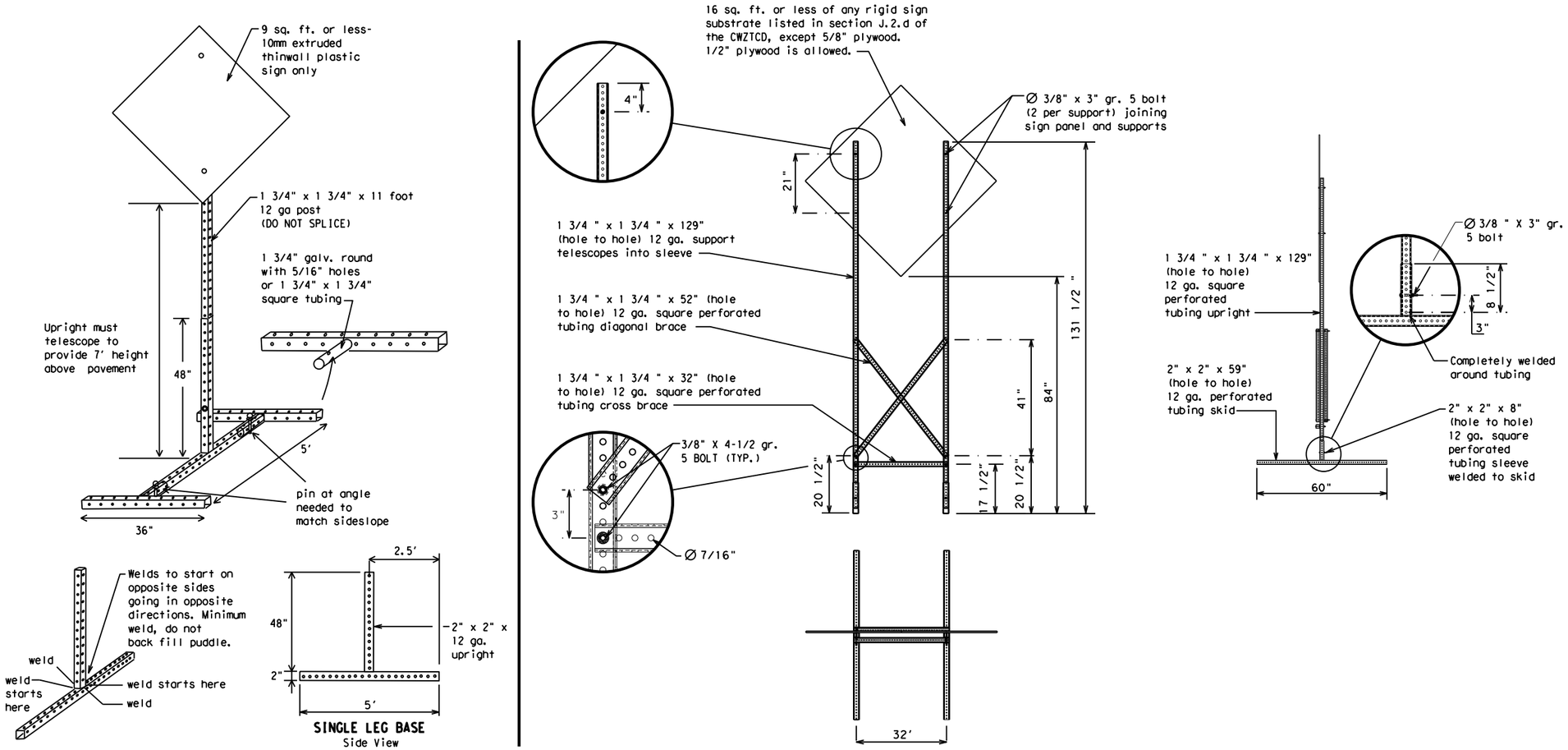

SKID MOUNTED PERFORATED SQUARE STEEL TUBING SIGN SUPPORTS

* LONG/INTERMEDIATE TERM STATIONARY - PORTABLE SKID MOUNTED SIGN SUPPORTS

WEDGE ANCHORS

Both steel and plastic Wedge Anchor Systems as shown on the SMD Standard Sheets may be used as temporary sign supports for signs up to 10 square feet of sign face. They may be set in concrete or in sturdy soils if approved by the Engineer. (See web address for "Traffic Engineering Standard Sheets" on BC(1)).

OTHER DESIGNS

MORE DETAILS OF APPROVED LONG/INTERMEDIATE AND SHORT TERM SUPPORTS CAN BE FOUND ON THE CWZTCD LIST. SEE BC(1) FOR WEBSITE LOCATION.

GENERAL NOTES

1. Nails may be used in the assembly of wooden sign supports, but 3/8" bolts with nuts or 3/8" x 3 1/2" lag screws must be used on every joint for final connection.
2. No more than 2 sign posts shall be placed within a 7 ft. circle, except for specific materials noted on the CWZTCD List.
3. When project is completed, all sign supports and foundations shall be removed from the project site. This will be considered subsidiary to Item 502.

* See BC(4) for definition of "Work Duration."

** Wood sign posts MUST be one piece. Splicing will NOT be allowed. Posts shall be painted white.

☐ See the CWZTCD for the type of sign substrate that can be used for each approved sign support.

SHEET 5 OF 12

Texas Department of Transportation — Traffic Safety Division Standard

BARRICADE AND CONSTRUCTION TYPICAL SIGN SUPPORT

BC(5)-21

FILE: bc-21.dgn	DN: TxDOT	CK: TxDOT	DW: TxDOT	CK: TxDOT
© TxDOT November 2002	CONT	SECT	JOB	HIGHWAY
REVISIONS				
9-07 8-14	DIST	COUNTY		SHEET NO.
7-13 5-21				12

DISCLAIMER:
The use of this standard is governed by the "Texas Engineering Practice Act". No warranty of any kind is made by TxDOT for any purpose whatsoever. TxDOT assumes no responsibility for the conversion of this standard to other formats or for incorrect results or damages resulting from its use.

DATE:
FILE:

WHEN NOT IN USE, REMOVE THE PCMS FROM THE RIGHT-OF-WAY OR PLACE THE PCMS BEHIND BARRIER OR GUARDRAIL WITH SIGN PANEL TURNED PARALLEL TO TRAFFIC

PORTABLE CHANGEABLE MESSAGE SIGNS

1. The Engineer/Inspector shall approve all messages used on portable changeable message signs (PCMS).
2. Messages on PCMS should contain no more than 8 words (about four to eight characters per word), not including simple words such as "TO," "FOR," "AT," etc.
3. Messages should consist of a single phase, or two phases that alternate. Three-phase messages are not allowed. Each phase of the message should convey a single thought, and must be understood by itself.
4. Use the word "EXIT" to refer to an exit ramp on a freeway; i.e., "EXIT CLOSED." Do not use the term "RAMP."
5. Always use the route or interstate designation (IH, US, SH, FM) along with the number when referring to a roadway.
6. When in use, the bottom of a stationary PCMS message panel should be a minimum 7 feet above the roadway, where possible.
7. The message term "WEEKEND" should be used only if the work is to start on Saturday morning and end by Sunday evening at midnight. Actual days and hours of work should be displayed on the PCMS if work is to begin on Friday evening and/or continue into Monday morning.
8. The Engineer/Inspector may select one of two options which are available for displaying a two-phase message on a PCMS. Each phase may be displayed for either four seconds each or for three seconds each.
9. Do not "flash" messages or words included in a message. The message should be steady burn or continuous while displayed.
10. Do not present redundant information on a two-phase message; i.e., keeping two lines of the message the same and changing the third line.
11. Do not use the word "Danger" in message.
12. Do not display the message "LANES SHIFT LEFT" or "LANES SHIFT RIGHT" on a PCMS. Drivers do not understand the message.
13. Do not display messages that scroll horizontally or vertically across the face of the sign.
14. The following table lists abbreviated words and two-word phrases that are acceptable for use on a PCMS. Both words in a phrase must be displayed together. Words or phrases not on this list should not be abbreviated, unless shown in the TMUTCD.
15. PCMS character height should be at least 18 inches for trailer mounted units. They should be visible from at least 1/2 (.5) mile and the text should be legible from at least 600 feet at night and 800 feet in daylight. Truck mounted units must have a character height of 10 inches and must be legible from at least 400 feet.
16. Each line of text should be centered on the message board rather than left or right justified.
17. If disabled, the PCMS should default to an illegible display that will not alarm motorists and will only be used to alert workers that the PCMS has malfunctioned. A pattern such as a series of horizontal solid bars is appropriate.

WORD OR PHRASE	ABBREVIATION
Access Road	ACCS RD
Alternate	ALT
Avenue	AVE
Best Route	BEST RTE
Boulevard	BLVD
Bridge	BRDG
Cannot	CANT
Center	CTR
Construction Ahead	CONST AHD
CROSSING	XING
Detour Route	DETOUR RTE
Do Not	DONT
East	E
Eastbound	(route) E
Emergency	EMER
Emergency Vehicle	EMER VEH
Entrance, Enter	ENT
Express Lane	EXP LN
Expressway	EXPWY
XXXX Feet	XXXX FT
Fog Ahead	FOG AHD
Freeway	FRWY, FWY
Freeway Blocked	FWY BLKD
Friday	FRI
Hazardous Driving	HAZ DRIVING
Hazardous Material	HAZMAT
High-Occupancy	HOV
Vehicle Highway	HWY
Hour(s)	HR, HRS
Information	INFO
It Is	ITS
Junction	JCT
Left	LFT
Left Lane	LFT LN
Lane Closed	LN CLOSED
Lower Level	LWR LEVEL
Maintenance	MAINT

WORD OR PHRASE	ABBREVIATION
Major	MAJ
Miles	MI
Miles Per Hour	MPH
Minor	MNR
Monday	MON
Normal	NORM
North	N
Northbound	(route) N
Parking	PKING
Road	RD
Right Lane	RT LN
Saturday	SAT
Service Road	SERV RD
Shoulder	SHLDR
Slippery	SLIP
South	S
Southbound	(route) S
Speed	SPD
Street	ST
Sunday	SUN
Telephone	PHONE
Temporary	TEMP
Thursday	THURS
To Downtown	TO DWNTN
Traffic	TRAF
Travelers	TRVLRS
Tuesday	TUES
Time Minutes	TIME MIN
Upper Level	UPR LEVEL
Vehicles (s)	VEH, VEHS
Warning	WARN
Wednesday	WED
Weight Limit	WT LIMIT
West	W
Westbound	(route) W
Wet Pavement	WET PVMT
Will Not	WONT

Roadway designation # IH-number, US-number, SH-number, FM-number

RECOMMENDED PHASES AND FORMATS FOR PCMS MESSAGES DURING ROADWORK ACTIVITIES

(The Engineer may approve other messages not specifically covered here.)

Phase 1: Condition Lists

Road/Lane/Ramp Closure List

FREEWAY CLOSED X MILE	FRONTAGE ROAD CLOSED
ROAD CLOSED AT SH XXX	SHOULDER CLOSED XXX FT
ROAD CLSD AT FM XXXX	RIGHT LN CLOSED XXX FT
RIGHT X LANES CLOSED	RIGHT X LANES OPEN
CENTER LANE CLOSED	DAYTIME LANE CLOSURES
NIGHT LANE CLOSURES	I-XX SOUTH EXIT CLOSED
VARIOUS LANES CLOSED	EXIT XXX CLOSED X MILE
EXIT CLOSED	RIGHT LN TO BE CLOSED
MALL DRIVEWAY CLOSED	X LANES CLOSED TUE - FRI
XXXXXXXX BLVD CLOSED	

Other Condition List

ROADWORK XXX FT	ROAD REPAIRS XXXX FT
FLAGGER XXXX FT	LANE NARROWS XXXX FT
RIGHT LN NARROWS XXXX FT	TWO-WAY TRAFFIC XX MILE
MERGING TRAFFIC XXXX FT	CONST TRAFFIC XXX FT
LOOSE GRAVEL XXXX FT	UNEVEN LANES XXXX FT
DETOUR X MILE	ROUGH ROAD XXXX FT
ROADWORK PAST SH XXXX	ROADWORK NEXT FRI-SUN
BUMP XXXX FT	US XXX EXIT X MILES
TRAFFIC SIGNAL XXXX FT	LANES SHIFT *

* LANES SHIFT in Phase 1 must be used with STAY IN LANE in Phase 2.

Phase 2: Possible Component Lists

Action to Take/Effect on Travel List

MERGE RIGHT	FORM X LINES RIGHT
DETOUR NEXT X EXITS	USE XXXXX RD EXIT
USE EXIT XXX	USE EXIT I-XX NORTH
STAY ON US XXX SOUTH	USE I-XX E TO I-XX N
TRUCKS USE US XXX N	WATCH FOR TRUCKS
WATCH FOR TRUCKS	EXPECT DELAYS
EXPECT DELAYS	PREPARE TO STOP
REDUCE SPEED XXX FT	END SHOULDER USE
USE OTHER ROUTES	WATCH FOR WORKERS
STAY IN LANE *	

Location List

AT FM XXXX
BEFORE RAILROAD CROSSING
NEXT X MILES
PAST US XXX EXIT
XXXXXXX TO XXXXXXX
US XXX TO FM XXXX

Warning List

SPEED LIMIT XX MPH
MAXIMUM SPEED XX MPH
MINIMUM SPEED XX MPH
ADVISORY SPEED XX MPH
RIGHT LANE EXIT
USE CAUTION
DRIVE SAFELY
DRIVE WITH CARE

** Advance Notice List

TUE-FRI XX AM- X PM
APR XX- XX X PM-X AM
BEGINS MONDAY
BEGINS MAY XX
MAY X-X XX PM - XX AM
NEXT FRI-SUN
XX AM TO XX PM
NEXT TUE AUG XX
TONIGHT XX PM- XX AM

** See Application Guidelines Note 6.

APPLICATION GUIDELINES

1. Only 1 or 2 phases are to be used on a PCMS.
2. The 1st phase (or both) should be selected from the "Road/Lane/Ramp Closure List" and the "Other Condition List".
3. A 2nd phase can be selected from the "Action to Take/Effect on Travel, Location, General Warning, or Advance Notice Phase Lists".
4. A Location Phase is necessary only if a distance or location is not included in the first phase selected.
5. If two PCMS are used in sequence, they must be separated by a minimum of 1000 ft. Each PCMS shall be limited to two phases, and should be understandable by themselves.
6. For advance notice, when the current date is within seven days of the actual work date, calendar days should be replaced with days of the week. Advance notification should typically be for no more than one week prior to the work.

WORDING ALTERNATIVES

1. The words RIGHT, LEFT and ALL can be interchanged as appropriate.
2. Roadway designations IH, US, SH, FM and LP can be interchanged as appropriate.
3. EAST, WEST, NORTH and SOUTH (or abbreviations E, W, N and S) can be interchanged as appropriate.
4. Highway names and numbers replaced as appropriate.
5. ROAD, HIGHWAY and FREEWAY can be interchanged as needed.
6. AHEAD may be used instead of distances if necessary.
7. FT and MI, MILE and MILES interchanged as appropriate.
8. AT, BEFORE and PAST interchanged as needed.
9. Distances or AHEAD can be eliminated from the message if a location phase is used.

PCMS SIGNS WITHIN THE R.O.W. SHALL BE BEHIND GUARDRAIL OR CONCRETE BARRIER OR SHALL HAVE A MINIMUM OF FOUR (4) PLASTIC DRUMS PLACED PERPENDICULAR TO TRAFFIC ON THE UPSTREAM SIDE OF THE PCMS, WHEN EXPOSED TO ONE DIRECTION OF TRAFFIC. WHEN EXPOSED TO TWO WAY TRAFFIC, THE FOUR DRUMS SHOULD BE PLACED WITH ONE DRUM AT EACH OF THE FOUR CORNERS OF THE UNIT.

FULL MATRIX PCMS SIGNS

1. When Full Matrix PCMS signs are used, the character height and legibility/visibility requirements shall be maintained as listed in Note 15 under "PORTABLE CHANGEABLE MESSAGE SIGNS" above.
2. When symbol signs, such as the "Flagger Symbol"(CW20-7) are represented graphically on the Full Matrix PCMS sign and, with the approval of the Engineer, it shall maintain the legibility/visibility requirement listed above.
3. When symbol signs are represented graphically on the Full Matrix PCMS, they shall only supplement the use of the static sign represented, and shall not substitute for, or replace that sign.
4. A full matrix PCMS may be used to simulate a flashing arrow board provided it meets the visibility, flash rate and dimming requirements on BC(7), for the same size arrow.

DISCLAIMER:
The use of this standard is governed by the "Texas Engineering Practice Act". No warranty of any kind is made by TxDOT for any purpose whatsoever. TxDOT assumes no responsibility for the conversion of this standard to other formats or for incorrect results or damages resulting from its use.

DATE:
FILE:

Texas Department of Transportation — Traffic Safety Division Standard

BARRICADE AND CONSTRUCTION PORTABLE CHANGEABLE MESSAGE SIGN (PCMS)

BC(6)-21

FILE: bc-21.dgn	DN: TxDOT	CK: TxDOT	DW: TxDOT	CK: TxDOT
© TxDOT November 2002	CONT	SECT	JOB	HIGHWAY
REVISIONS				
9-07 8-14	DIST	COUNTY		SHEET NO.
7-13 5-21				13

100

1. Barrier Reflectors shall be pre-qualified, and conform to the color and reflectivity requirements of DMS-8600. A list of prequalified Barrier Reflectors can be found at the Material Producer List web address shown on BC(1).
2. Color of Barrier Reflectors shall be as specified in the TMUTCD. The cost of the reflectors shall be considered subsidiary to Item 512.

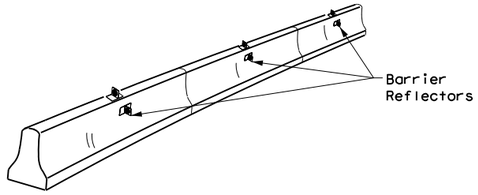

CONCRETE TRAFFIC BARRIER (CTB)

3. Where traffic is on one side of the CTB, two (2) Barrier Reflectors shall be mounted in approximately the midsection of each section of CTB. An alternate mounting location is uniformly spaced at one end of each CTB. This will allow for attachment of a barrier grapple without damaging the reflector. The Barrier Reflector mounted on the side of the CTB shall be located directly below the reflector mounted on top of the barrier, as shown in the detail above.
4. Where CTB separates two-way traffic, three barrier reflectors shall be mounted on each section of CTB. The reflector unit on top shall have two yellow reflective faces (Bi-Directional)while the reflectors on each side of the barrier shall have one yellow reflective face, as shown in the detail above.
5. When CTB separates traffic traveling in the same direction, no barrier reflectors will be required on top of the CTB.
6. Barrier Reflector units shall be yellow or white in color to match the edgeline being supplemented.
7. Maximum spacing of Barrier Reflectors is forty (40) feet.
8. Pavement markers or temporary flexible-reflective roadway marker tabs shall NOT be used as CTB delineation.
9. Attachment of Barrier Reflectors to CTB shall be per manufacturer's recommendations.
10. Missing or damaged Barrier Reflectors shall be replaced as directed by the Engineer.
11. Single slope barriers shall be delineated as shown on the above detail.

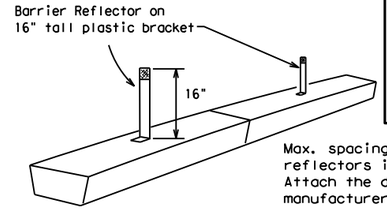

Max. spacing of barrier reflectors is 20 feet. Attach the delineators as per manufacturer's recommendations.

LOW PROFILE CONCRETE BARRIER (LPCB)

LOW PROFILE CONCRETE BARRIER (LPCB) USED IN WORK ZONES

LPCB is approved for use in work zone locations, where the posted speed is 45mph, or less. See Roadway Standard Sheet LPCB.

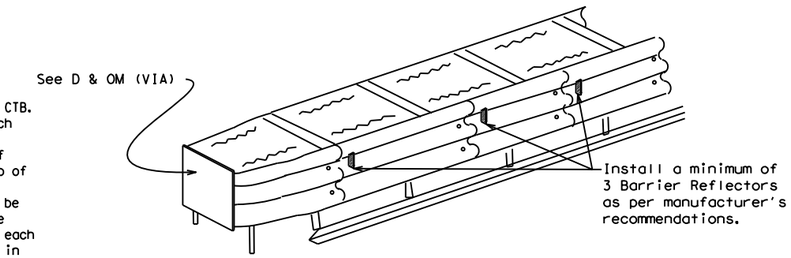

DELINEATION OF END TREATMENTS

END TREATMENTS FOR CTB'S USED IN WORK ZONES

End treatments used on CTB's in work zones shall meet the apppropriate crashworthy standards as defined in the Manual for Assessing Safety Hardware (MASH). Refer to the CWZTCD List for approved end treatments and manufacturers.

BARRIER REFLECTORS FOR CONCRETE TRAFFIC BARRIER AND ATTENUATORS

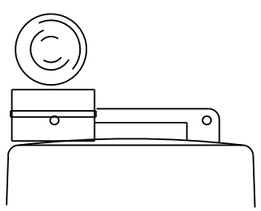

Type C Warning Light or approved substitute mounted on a drum adjacent to the travel way.

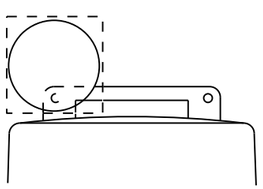

Warning reflector may be round or square.Must have a yellow reflective surface area of at least 30 square inches

WARNING LIGHTS

1. Warning lights shall meet the requirements of the TMUTCD.
2. Warning lights shall NOT be installed on barricades.
3. Type A-Low Intensity Flashing Warning Lights are commonly used with drums. They are intended to warn of or mark a potentially hazardous area. Their use shall be as indicated on this sheet and/or other sheets of the plans by the designation "FL". The Type A Warning Lights shall not be used with signs manufactured with Type B_{FL} or C_{FL} Sheeting meeting the requirements of Departmental Material Specification DMS-8300.
4. Type-C and Type D 360 degree Steady Burn Lights are intended to be used in a series for delineation to supplement other traffic control devices. Their use shall be as indicated on this sheet and/or other sheets of the plans by the designation "SB".
5. The Engineer/Inspector or the plans shall specify the location and type of warning lights to be installed on the traffic control devices.
6. When required by the Engineer, the Contractor shall furnish a copy of the warning lights certification. The warning light manufacturer will certify the warning lights meet the requirements of the latest ITE Purchase Specifications for Flashing and Steady-Burn Warning Lights.
7. When used to delineate curves, Type-C and Type D Steady Burn Lights should only be placed on the outside of the curve, not the inside.
8. The location of warning lights and warning reflectors on drums shall be as shown elsewhere in the plans.

WARNING LIGHTS MOUNTED ON PLASTIC DRUMS

1. Type A flashing warning lights are intended to warn drivers that they are approaching or are in a potentially hazardous area.
2. Type A random flashing warning lights are not intended for delineation and shall not be used in a series.
3. A series of sequential flashing warning lights placed on channelizing devices to form a merging taper may be used for delineation. If used, the successive flashing of the sequential warning lights should occur from the beginning of the taper to the end of the merging taper in order to identify the desired vehicle path. The rate of flashing for each light shall be 65 flashes per minute, plus or minus 10 flashes.
4. Type C and D steady-burn warning lights are intended to be used in a series to delineate the edge of the travel lane on detours, on lane changes, on lane closures, and on other similar conditions.
5. Type A, Type C and Type D warning lights shall be installed at locations as detailed on other sheets in the plans.
6. Warning lights shall not be installed on a drum that has a sign, chevron or vertical panel.
7. The maximum spacing for warning lights on drums should be identical to the channelizing device spacing.

WARNING REFLECTORS MOUNTED ON PLASTIC DRUMS AS A SUBSTITUTE FOR TYPE C (STEADY BURN) WARNING LIGHTS

1. A warning reflector or approved substitute may be mounted on a plastic drum as a substitute for a Type C, steady burn warning light at the discretion of the Contractor unless otherwise noted in the plans.
2. The warning reflector shall be yellow in color and shall be manufactured using a sign substrate approved for use with plastic drums listed on the CWZTCD.
3. The warning reflector shall have a minimum retroreflective surface area (one-side) of 30 square inches.
4. Round reflectors shall be fully reflectorized, including the area where attached to the drum.
5. Square substrates must have a minimum of 30 square inches of reflectorized sheeting. They do not have to be reflectorized where it attaches to the drum.
6. The side of the warning reflector facing approaching traffic shall have sheeting meeting the color and retroreflectivity requirements for DMS 8300-Type B or Type C.
7. When used near two-way traffic, both sides of the warning reflector shall be reflectorized.
8. The warning reflector should be mounted on the side of the handle nearest approaching traffic.
9. The maximum spacing for warning reflectors should be identical to the channelizing device spacing requirements.

Arrow Boards may be located behind channelizing devices in place for a shoulder taper or merging taper, otherwise they shall be delineated with four (4) channelizing devices placed perpendicular to traffic on the upstream side of traffic.

1. The Flashing Arrow Board should be used for all lane closures on multi-lane roadways, or slow moving maintenance or construction activities on the travel lanes.
2. Flashing Arrow Boards should not be used on two-lane, two-way roadways, detours, diversions or work on shoulders unless the "CAUTION" display (see detail below) is used.
3. The Engineer/Inspector shall choose all appropriate signs, barricades and/or other traffic control devices that should be used in conjunction with the Flashing Arrow Board.
4. The Flashing Arrow Board should be able to display the following symbols:

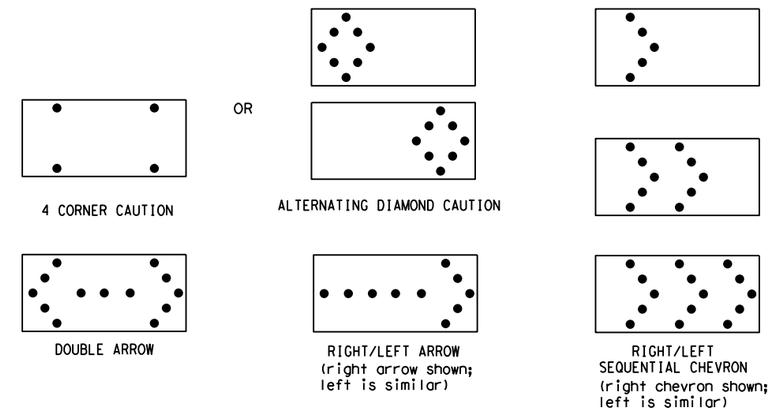

5. The "CAUTION" display consists of four corner lamps flashing simultaneously, or the Alternating Diamond Caution mode as shown.
6. The straight line caution display is NOT ALLOWED.
7. The Flashing Arrow Board shall be capable of minimum 50 percent dimming from rated lamp voltage. The flashing rate of the lamps shall not be less than 25 nor more than 40 flashes per minute.
8. Minimum lamp "on time" shall be approximately 50 percent for the flashing arrow and equal intervals of 25 percent for each sequential phase of the flashing chevron.
9. The sequential arrow display is NOT ALLOWED.
10. The flashing arrow display is the TxDOT standard; however, the sequential chevron display may be used during daylight operations.
11. The Flashing Arrow Board shall be mounted on a vehicle, trailer or other suitable support.
12. A Flashing Arrow Board SHALL NOT BE USED to laterally shift traffic.
13. A full matrix PCMS may be used to simulate a Flashing Arrow Board provided it meets visibility, flash rate and dimming requirements on this sheet for the same size arrow.
14. Minimum mounting height of trailer mounted Arrow Boards should be 7 feet from roadway to bottom of panel.

REQUIREMENTS

TYPE	MINIMUM SIZE	MINIMUM NUMBER OF PANEL LAMPS	MINIMUM VISIBILITY DISTANCE
B	30 x 60	13	3/4 mile
C	48 x 96	15	1 mile

ATTENTION

Flashing Arrow Boards shall be equipped with automatic dimming devices.

WHEN NOT IN USE, REMOVE THE ARROW BOARD FROM THE RIGHT-OF-WAY OR PLACE THE ARROW BOARD BEHIND CONCRETE TRAFFIC BARRIER OR GUARDRAIL.

FLASHING ARROW BOARDS

SHEET 7 OF 12

TRUCK-MOUNTED ATTENUATORS

1. Truck-mounted attenuators (TMA) used on TxDOT facilities must meet the requirements outlined in the Manual for Assessing Safety Hardware (MASH).
2. Refer to the CWZTCD for the requirements of Level 2 or Level 3 TMAs.
3. Refer to the CWZTCD for a list of approved TMAs.
4. TMAs are required on freeways unless otherwise noted in the plans.
5. A TMA should be used anytime that it can be positioned 30 to 100 feet in advance of the area of crew exposure without adversely affecting the work performance.
6. The only reason a TMA should not be required is when a work area is spread down the roadway and the work crew is an extended distance from the TMA.

Texas Department of Transportation — Traffic Safety Division Standard

BARRICADE AND CONSTRUCTION ARROW PANEL, REFLECTORS, WARNING LIGHTS & ATTENUATOR

BC(7)-21

FILE: bc-21.dgn	DN: TxDOT	CK: TxDOT	DW: TxDOT	CK: TxDOT
© TxDOT November 2002	CONT	SECT	JOB	HIGHWAY
REVISIONS 9-07 8-14, 7-13 5-21	DIST		COUNTY	SHEET NO. 14

101

DISCLAIMER:
The use of this standard is governed by the "Texas Engineering Practice Act". No warranty of any kind is made by TxDOT for any purpose whatsoever. TxDOT assumes no responsibility for the conversion of this standard to other formats or for incorrect results or damages resulting from its use.

DATE:
FILE:

DISCLAIMER:
The use of this standard is governed by the "Texas Engineering Practice Act". No warranty of any kind is made by TxDOT for any purpose whatsoever. TxDOT assumes no responsibility for the conversion of this standard to other formats or for incorrect results or damages resulting from its use.

GENERAL NOTES

1. For long term stationary work zones on freeways, drums shall be used as the primary channelizing device.
2. For intermediate term stationary work zones on freeways, drums should be used as the primary channelizing device but may be replaced in tangent sections by vertical panels, or 42" two-piece cones. In tangent sections, one-piece cones may be used with the approval of the Engineer but only if personnel are present on the project at all times to maintain the cones in proper position and location.
3. For short term stationary work zones on freeways, drums are the preferred channelizing device but may be replaced in tapers, transitions and tangent sections by vertical panels, two-piece cones or one-piece cones as approved by the Engineer.
4. Drums and all related items shall comply with the requirements of the current version of the "Texas Manual on Uniform Traffic Control Devices" (TMUTCD) and the "Compliant Work Zone Traffic Control Devices List" (CWZTCD).
5. Drums, bases, and related materials shall exhibit good workmanship and shall be free from objectionable marks or defects that would adversely affect their appearance or serviceability.
6. The Contractor shall have a maximum of 24 hours to replace any plastic drums identified for replacement by the Engineer/Inspector. The replacement device must be an approved device.

GENERAL DESIGN REQUIREMENTS

Pre-qualified plastic drums shall meet the following requirements:

1. Plastic drums shall be a two-piece design; the "body" of the drum shall be the top portion and the "base" shall be the bottom.
2. The body and base shall lock together in such a manner that the body separates from the base when impacted by a vehicle traveling at a speed of 20 MPH or greater but prevents accidental separation due to normal handling and/or air turbulence created by passing vehicles.
3. Plastic drums shall be constructed of lightweight flexible, and deformable materials. The Contractor shall NOT use metal drums or single piece plastic drums as channelization devices or sign supports.
4. Drums shall present a profile that is a minimum of 18 inches in width at the 36 inch height when viewed from any direction. The height of drum unit (body installed on base) shall be a minimum of 36 inches and a maximum of 42 inches.
5. The top of the drum shall have a built-in handle for easy pickup and shall be designed to drain water and not collect debris. The handle shall have a minimum of two widely spaced 9/16 inch diameter holes to allow attachment of a warning light, warning reflector unit or approved compliant sign.
6. The exterior of the drum body shall have a minimum of four alternating orange and white retroreflective circumferential stripes not less than 4 inches nor greater than 8 inches in width. Any non-reflectorized space between any two adjacent stripes shall not exceed 2 inches in width.
7. Bases shall have a maximum width of 36 inches, a maximum height of 4 inches, and a minimum of two footholds of sufficient size to allow base to be held down while separating the drum body from the base.
8. Plastic drums shall be constructed of ultra-violet stabilized, orange, high-density polyethylene (HDPE) or other approved material.
9. Drum body shall have a maximum unballasted weight of 11 lbs.
10. Drum and base shall be marked with manufacturer's name and model number.

RETROREFLECTIVE SHEETING

1. The stripes used on drums shall be constructed of sheeting meeting the color and retroreflectivity requirements of Departmental Materials Specification DMS-8300, "Sign Face Materials." Type A or Type B reflective sheeting shall be supplied unless otherwise specified in the plans.
2. The sheeting shall be suitable for use on and shall adhere to the drum surface such that, upon vehicular impact, the sheeting shall remain adhered in-place and exhibit no delaminating, cracking, or loss of retroreflectivity other than that loss due to abrasion of the sheeting surface.

BALLAST

1. Unballasted bases shall be large enough to hold up to 50 lbs. of sand. This base, when filled with the ballast material, should weigh between 35 lbs (minimum) and 50 lbs (maximum). The ballast may be sand in one to three sandbags separate from the base, sand in a sand-filled plastic base, or other ballasting devices as approved by the Engineer. Stacking of sandbags will be allowed, however height of sandbags above pavement surface may not exceed 12 inches.
2. Bases with built-in ballast shall weigh between 40 lbs. and 50 lbs. Built-in ballast can be constructed of an integral crumb rubber base or a solid rubber base.
3. Recycled truck tire sidewalls may be used for ballast on drums approved for this type of ballast on the CWZTCD list.
4. The ballast shall not be heavy objects, water, or any material that would become hazardous to motorists, pedestrians, or workers when the drum is struck by a vehicle.
5. When used in regions susceptible to freezing, drums shall have drainage holes in the bottoms so that water will not collect and freeze becoming a hazard when struck by a vehicle.
6. Ballast shall not be placed on top of drums.
7. Adhesives may be used to secure base of drums to pavement.

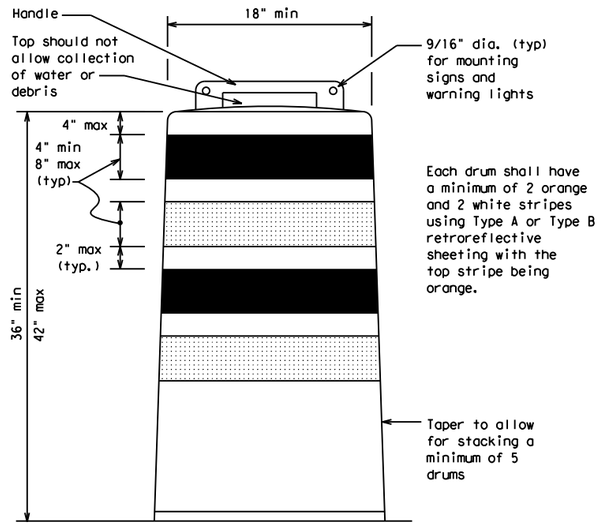

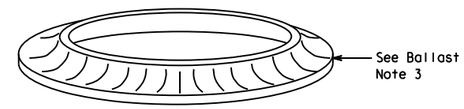

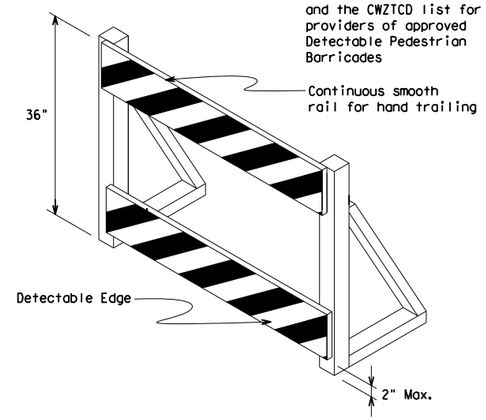

DETECTABLE PEDESTRIAN BARRICADES

1. When existing pedestrian facilities are disrupted, closed, or relocated in a TTC zone, the temporary facilities shall be detectable and include accessibility features consistent with the features present in the existing pedestrian facility. Refer to WZ(BTS-2) for Pedestrian Control requirements for Sidewalk Diversions, Sidewalk Detours and Crosswalk Closures.
2. Where pedestrians with visual disabilities normally use the closed sidewalk, a Detectable Pedestrian Barricade shall be placed across the full width of the closed sidewalk instead of a Type 3 Barricade.
3. Detectable pedestrian barricades similar to the one pictured above, longitudinal channelizing devices, some concrete barriers, and wood or chain link fencing with a continuous detectable edging can satisfactorily delineate a pedestrian path.
4. Tape, rope, or plastic chain strung between devices are not detectable, do not comply with the design standards in the "Americans with Disabilities Act Accessibility Guidelines (ADAAG)" and should not be used as a control for pedestrian movements.
5. Warning lights shall not be attached to detectable pedestrian barricades.
6. Detectable pedestrian barricades should use 8" nominal barricade rails as shown on BC(10) provided that the top rail provides a smooth continuous rail suitable for hand trailing with no splinters, burrs, or sharp edges.

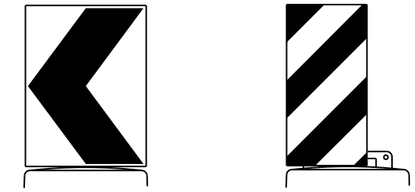

18" x 24" Sign (Maximum Sign Dimension) Chevron CW1-8, Opposing Traffic Lane Divider, Driveway sign D70a, Keep Right R4 series or other signs as approved by Engineer

12" x 24" Vertical Panel mount with diagonals sloping down towards travel way

Plywood, Aluminum or Metal sign substrates shall NOT be used on plastic drums

SIGNS, CHEVRONS, AND VERTICAL PANELS MOUNTED ON PLASTIC DRUMS

1. Signs used on plastic drums shall be manufactured using substrates listed on the CWZTCD.
2. Chevrons and other work zone signs with an orange background shall be manufactured with Type B_{FL} or Type C_{FL} Orange sheeting meeting the color and retroreflectivity requirements of DMS-8300, "Sign Face Material," unless otherwise specified in the plans.
3. Vertical Panels shall be manufactured with orange and white sheeting meeting the requirements of DMS-8300 Type A or Type B. Diagonal stripes on Vertical Panels shall slope down toward the intended traveled lane.
4. Other sign messages (text or symbolic) may be used as approved by the Engineer. Sign dimensions shall not exceed 18 inches in width or 24 inches in height, except for the R9 series signs discussed in note 8 below.
5. Signs shall be installed using a 1/2 inch bolt (nominal) and nut, two washers, and one locking washer for each connection.
6. Mounting bolts and nuts shall be fully engaged and adequately torqued. Bolts should not extend more than 1/2 inch beyond nuts.
7. Chevrons may be placed on drums on the outside of curves, on merging tapers or on shifting tapers. When used in these locations, they may be placed on every drum or spaced not more than on every third drum. A minimum of three (3) should be used at each location called for in the plans.
8. R9-9, R9-10, R9-11 and R9-11a Sidewalk Closed signs which are 24 inches wide may be mounted on plastic drums, with approval of the Engineer.

Texas Department of Transportation — Traffic Safety Division Standard

BARRICADE AND CONSTRUCTION CHANNELIZING DEVICES

BC(8)-21

FILE: bc-21.dgn	DN: TxDOT	CK: TxDOT	DW: TxDOT	CK: TxDOT
© TxDOT November 2002	CONT	SECT	JOB	HIGHWAY
REVISIONS 4-03 8-14, 9-07 5-21, 7-13	DIST	COUNTY		SHEET NO. 15

DATE:
FILE:

DISCLAIMER:
The use of this standard is governed by the "Texas Engineering Practice Act". No warranty of any kind is made by TxDOT for any purpose whatsoever. TxDOT assumes no responsibility for the conversion of this standard to other formats or for incorrect results or damages resulting from its use.

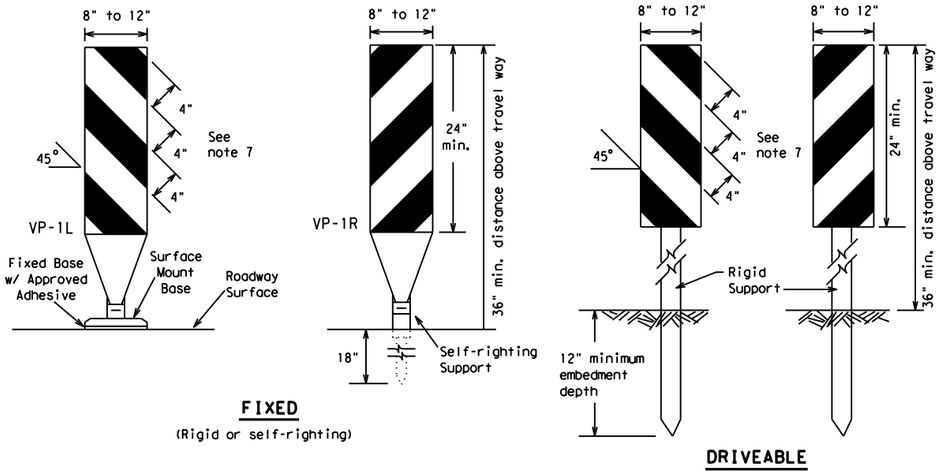

FIXED

(Rigid or self-righting)

DRIVEABLE

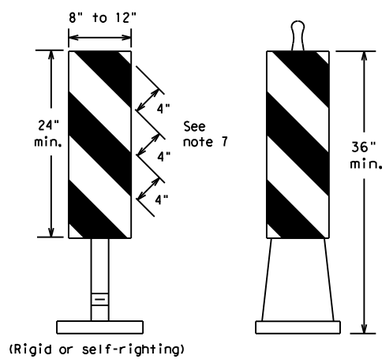

(Rigid or self-righting)

PORTABLE

1. Vertical Panels (VP's) are normally used to channelize traffic or divide opposing lanes of traffic.
2. VP's may be used in daytime or nighttime situations. They may be used at the edge of shoulder drop-offs and other areas such as lane transitions where positive daytime and nighttime delineation is required. The Engineer/Inspector shall refer to the Roadway Design Manual for additional requirements on the use VP's for drop-offs.
3. VP's should be mounted back to back if used at the edge of cuts adjacent to two-way two lane roadways. Stripes are to be reflective orange and reflective white and should always slope downward toward the travel lane.
4. VP's used on expressways and freeways or other high speed roadways, may have more than 270 square inches of retroreflective area facing traffic.
5. Self-righting supports are available with portable base. See "Compliant Work Zone Traffic Control Devices List" (CWZTCD).
6. Sheeting for the VP's shall be retroreflective Type A or Type B conforming to Departmental Material Specification DMS-8300, unless noted otherwise.
7. Where the height of reflective material on the vertical panel is 36 inches or greater, a panel stripe of 6 inches shall be used.

VERTICAL PANELS (VPs)

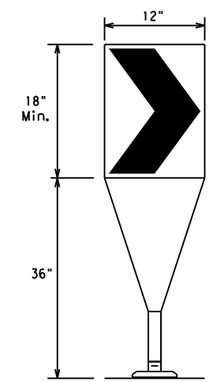

Fixed Base w/ Approved Adhesive (Driveable Base, or Flexible Support can be used)

1. The chevron shall be a vertical rectangle with a minimum size of 12 by 18 inches.
2. Chevrons are intended to give notice of a sharp change of alignment with the direction of travel and provide additional emphasis and guidance for vehicle operators with regard to changes in horizontal alignment of the roadway.
3. Chevrons, when used, shall be erected on the outside of a sharp curve or turn, or on the far side of an intersection. They shall be in line with and at right angles to approaching traffic. Spacing should be such that the motorist always has three in view, until the change in alignment eliminates its need.
4. To be effective, the chevron should be visible for at least 500 feet.
5. Chevrons shall be orange with a black nonreflective legend. Sheeting for the chevron shall be retroreflective Type B_{FL} or Type C_{FL} conforming to Departmental Material Specification DMS-8300, unless noted otherwise. The legend shall meet the requirements of DMS-8300.
6. For Long Term Stationary use on tapers or transitions on freeways and divided highways, self-righting chevrons may be used to supplement plastic drums but not to replace plastic drums.

CHEVRONS

GENERAL NOTES

1. Work Zone channelizing devices illustrated on this sheet may be installed in close proximity to traffic and are suitable for use on high or low speed roadways. The Engineer/Inspector shall ensure that spacing and placement is uniform and in accordance with the "Texas Manual on Uniform Traffic Control Devices" (TMUTCD).
2. Channelizing devices shown on this sheet may have a driveable, fixed or portable base. The requirement for self-righting channelizing devices must be specified in the General Notes or other plan sheets.
3. Channelizing devices on self-righting supports should be used in work zone areas where channelizing devices are frequently impacted by errant vehicles or vehicle related wind gusts making alignment of the channelizing devices difficult to maintain. Locations of these devices shall be detailed elsewhere in the plans. These devices shall conform to the TMUTCD and the "Compliant Work Zone Traffic Control Devices List" (CWZTCD).
4. The Contractor shall maintain devices in a clean condition and replace damaged, nonreflective, faded, or broken devices and bases as required by the Engineer/Inspector. The Contractor shall be required to maintain proper device spacing and alignment.
5. Portable bases shall be fabricated from virgin and/or recycled rubber. The portable bases shall weigh a minimum of 30 lbs.
6. Pavement surfaces shall be prepared in a manner that ensures proper bonding between the adhesives, the fixed mount bases and the pavement surface. Adhesives shall be prepared and applied according to the manufacturer's recommendations.
7. The installation and removal of channelizing devices shall not cause detrimental effects to the final pavement surfaces, including pavement surface discoloration or surface integrity. Driveable bases shall not be permitted on final pavement surfaces. The Engineer/Inspector shall approve all application and removal procedures of fixed bases.

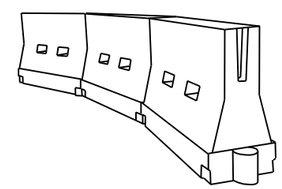

LONGITUDINAL CHANNELIZING DEVICES (LCD)

1. LCDs are crashworthy, lightweight, deformable devices that are highly visible, have good target value and can be connected together. They are not designed to contain or redirect a vehicle on impact.
2. LCDs may be used instead of a line of cones or drums.
3. LCDs shall be placed in accordance to application and installation requirements specific to the device, and used only when shown on the CWZTCD list.
4. LCDs should not be used to provide positive protection for obstacles, pedestrians or workers.
5. LCDs shall be supplemented with retroreflective delineation as required for temporary barriers on BC(7) when placed roughly parallel to the travel lanes.
6. LCDs used as barricades placed perpendicular to traffic should have at least one row of reflective sheeting meeting the requirements for barricade rails as shown on BC(10). Place reflective sheeting near the top of the LCD along the full length of the device.

WATER BALLASTED SYSTEMS USED AS BARRIERS

1. Water ballasted systems used as barriers shall not be used solely to channelize road users, but also to protect the work space per the appropriate Manual for Assessing Safety Hardware (MASH) crashworthiness requirements based on roadway speed and barrier application.
2. Water ballasted systems used to channelize vehicular traffic shall be supplemented with retroreflective delineation or channelizing devices to improve daytime/nighttime visibility. They may also be supplemented with pavement markings.
3. Water ballasted systems used as barriers shall be placed in accordance to application and installation requirements specific to the device, and used only when shown on the CWZTCD list.
4. Water ballasted systems used as barriers should not be used for a merging taper except in low speed (less than 45 MPH) urban areas. When used on a taper in a low speed urban area, the taper shall be delineated and the taper length should be designed to optimize road user operations considering the available geometric conditions.
5. When water ballasted systems used as barriers have blunt ends exposed to traffic, they should be attenuated as per manufacturer recommendations or flared to a point outside the clear zone.

If used to channelize pedestrians, longitudinal channelizing devices or water ballasted systems must have a continuous detectable bottom for users of long canes and the top of the unit shall not be less than 32 inches in height.

HOLLOW OR WATER BALLASTED SYSTEMS USED AS LONGITUDINAL CHANNELIZING DEVICES OR BARRIERS

Posted Speed	Formula	Minimum Desirable Taper Lengths **			Suggested Maximum Spacing of Channelizing Devices	
		10' Offset	11' Offset	12' Offset	On a Taper	On a Tangent
30	$L = \frac{WS^2}{60}$	150'	165'	180'	30'	60'
35		205'	225'	245'	35'	70'
40		265'	295'	320'	40'	80'
45	L = WS	450'	495'	540'	45'	90'
50		500'	550'	600'	50'	100'
55		550'	605'	660'	55'	110'
60		600'	660'	720'	60'	120'
65		650'	715'	780'	65'	130'
70		700'	770'	840'	70'	140'
75		750'	825'	900'	75'	150'
80		800'	880'	960'	80'	160'

** Taper lengths have been rounded off.
L=Length of Taper (FT.) W=Width of Offset (FT.)
S=Posted Speed (MPH)

SUGGESTED MAXIMUM SPACING OF CHANNELIZING DEVICES AND MINIMUM DESIRABLE TAPER LENGTHS

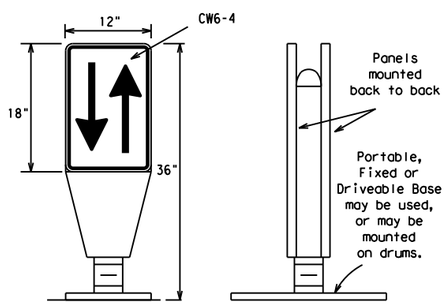

1. Opposing Traffic Lane Dividers (OTLD) are delineation devices designed to convert a normal one-way roadway section to two-way operation. OTLD's are used on temporary centerlines. The upward and downward arrows on the sign's face indicate the direction of traffic on either side of the divider. The base is secured to the pavement with an adhesive or rubber weight to minimize movement caused by a vehicle impact or wind gust.
2. The OTLD may be used in combination with 42" cones or VPs.
3. Spacing between the OTLD shall not exceed 500 feet. 42" cones or VPs placed between the OTLD's should not exceed 100 foot spacing.
4. The OTLD shall be orange with a black nonreflective legend. Sheeting for the OTLD shall be retroreflective Type B_{FL} or Type C_{FL} conforming to Departmental Material Specification DMS-8300, unless noted otherwise. The legend shall meet the requirements of DMS-8300.

OPPOSING TRAFFIC LANE DIVIDERS (OTLD)

SHEET 9 OF 12

Texas Department of Transportation — Traffic Safety Division Standard

BARRICADE AND CONSTRUCTION CHANNELIZING DEVICES

BC(9)-21

FILE: bc-21.dgn	DN: TxDOT	CK: TxDOT	DW: TxDOT	CK: TxDOT
© TxDOT November 2002	CONT	SECT	JOB	HIGHWAY
REVISIONS 9-07 8-14 7-13 5-21	DIST		COUNTY	SHEET NO. 16

DATE:
FILE:

DISCLAIMER:
The use of this standard is governed by the "Texas Engineering Practice Act". No warranty of any kind is made by TxDOT for any purpose whatsoever. TxDOT assumes no responsibility for the conversion of this standard to other formats or for incorrect results or damages resulting from its use.

TYPE 3 BARRICADES

1. Refer to the Compliant Work Zone Traffic Control Devices List (CWZTCD) for details of the Type 3 Barricades and a list of all materials used in the construction of Type 3 Barricades.
2. Type 3 Barricades shall be used at each end of construction projects closed to all traffic.
3. Barricades extending across a roadway should have stripes that slope downward in the direction toward which traffic must turn in detouring. When both right and left turns are provided, the chevron striping may slope downward in both directions from the center of the barricade. Where no turns are provided at a closed road, striping should slope downward in both directions toward the center of roadway.
4. Striping of rails, for the right side of the roadway, should slope downward to the left. For the left side of the roadway, striping should slope downward to the right.
5. Identification markings may be shown only on the back of the barricade rails. The maximum height of letters and/or company logos used for identification shall be 1".
6. Barricades shall not be placed parallel to traffic unless an adequate clear zone is provided.
7. Warning lights shall NOT be installed on barricades.
8. Where barricades require the use of weights to keep from turning over, the use of sandbags with dry, cohesionless sand is recommended. The sandbags will be tied shut to keep the sand from spilling and to maintain a constant weight. Sand bags shall not be stacked in a manner that covers any portion of a barricade rails reflective sheeting. Rock, concrete, iron, steel or other solid objects will NOT be permitted. Sandbags should weigh a minimum of 35 lbs and a maximum of 50 lbs. Sandbags shall be made of a durable material that tears upon vehicular impact. Rubber (such as tire inner tubes) shall not be used for sandbags. Sandbags shall only be placed along or upon the base supports of the device and shall not be suspended above ground level or hung with rope, wire, chains or other fasteners.
9. Sheeting for barricades shall be retroreflective Type A or Type B conforming to Departmental Material Specification DMS-8300 unless otherwise noted.

Barricades shall NOT be used as a sign support.

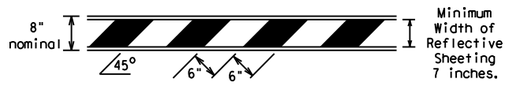

TYPICAL STRIPING DETAIL FOR BARRICADE RAIL

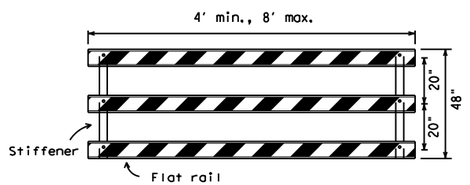

Stiffener may be inside or outside of support, but no more than 2 stiffeners shall be allowed on one barricade.

TYPICAL PANEL DETAIL FOR SKID OR POST TYPE BARRICADES

Each roadway of a divided highway shall be barricaded in the same manner.

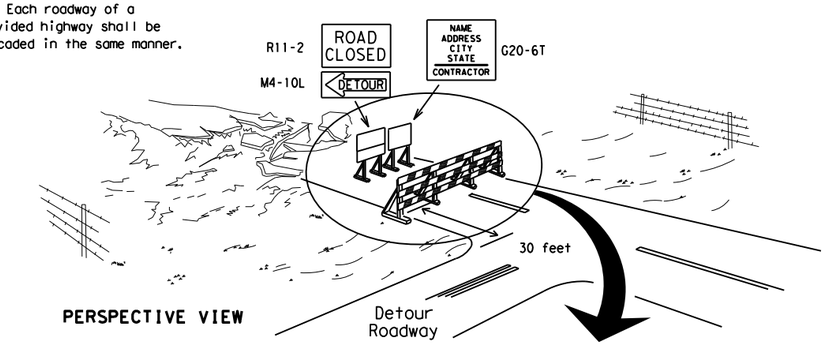

PERSPECTIVE VIEW

The three rails on Type 3 barricades shall be reflectorized orange and reflective white stripes on one side facing one-way traffic and both sides for two-way traffic.
Barricade striping should slant downward in the direction of detour.

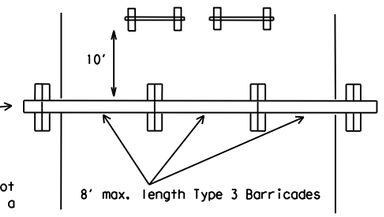

PLAN VIEW

1. Signs should be mounted on independent supports at a 7 foot mounting height in center of roadway. The signs should be a minimum of 10 feet behind Type 3 Barricades.
2. Advance signing shall be as specified elsewhere in the plans.

TYPE 3 BARRICADE (POST AND SKID) TYPICAL APPLICATION

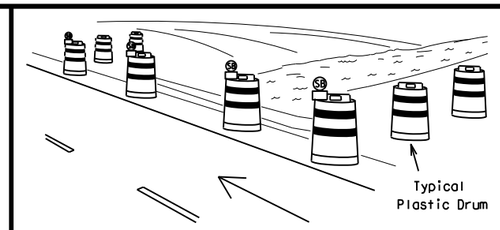

PERSPECTIVE VIEW

1. Where positive redirectional capability is provided, drums may be omitted.
2. Plastic construction fencing may be used with drums for safety as required in the plans.
3. Vertical Panels on flexible support may be substituted for drums when the shoulder width is less than 4 feet.
4. When the shoulder width is greater than 12 feet, steady-burn lights may be omitted if drums are used.
5. Drums must extend the length of the culvert widening.

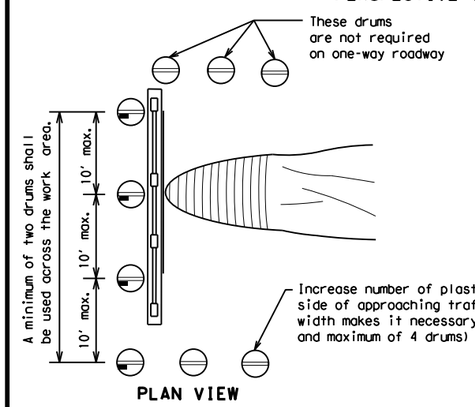

PLAN VIEW

LEGEND	
	Plastic drum
	Plastic drum with steady burn light or yellow warning reflector
SB	Steady burn warning light or yellow warning reflector

CULVERT WIDENING OR OTHER ISOLATED WORK WITHIN THE PROJECT LIMITS

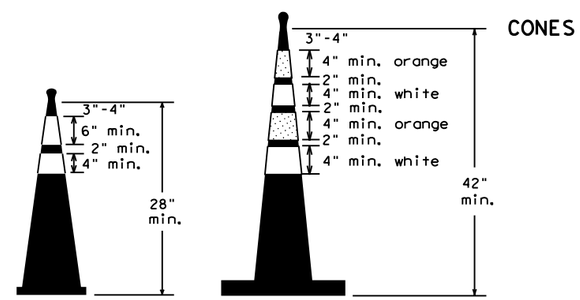

Two-Piece cones

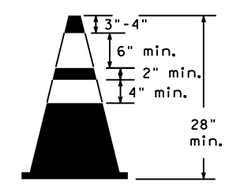

One-Piece cones

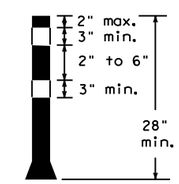

Tubular Marker

28" Cones shall have a minimum weight of 9 1/2 lbs.

42" 2-piece cones shall have a minimum weight of 30 lbs. including base.

1. Traffic cones and tubular markers shall be predominantly orange, and meet the height and weight requirements shown above.
2. One-piece cones have the body and base of the cone molded in one consolidated unit. Two-piece cones have a cone shaped body and a separate rubber base, or ballast, that is added to keep the device upright and in place.
3. Two-piece cones may have a handle or loop extending up to 8" above the minimum height shown, in order to aid in retrieving the device.
4. Cones or tubular markers shall have white or white and orange reflective bands as shown above. The reflective bands shall have a smooth, sealed outer surface and meet the requirements of Departmental Material Specification DMS-8300 Type A or Type B.
5. 28" cones and tubular markers are generally suitable for short duration and short-term stationary work as defined on BC(4). These should not be used for intermediate-term or long-term stationary work unless personnel is on-site to maintain them in their proper upright position.
6. 42" two-piece cones, vertical panels or drums are suitable for all work zone durations.
7. Cones or tubular markers used on each project should be of the same size and shape.

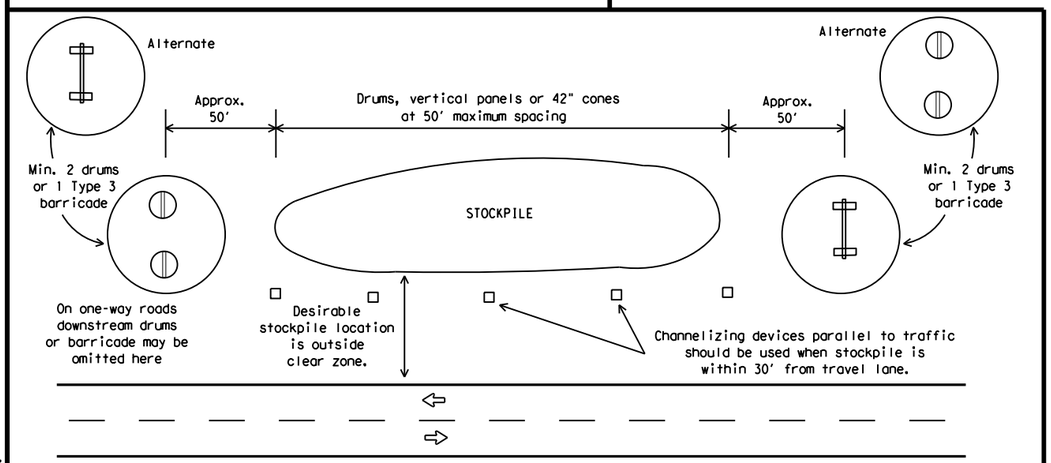

TRAFFIC CONTROL FOR MATERIAL STOCKPILES

SHEET 10 OF 12

Texas Department of Transportation — Traffic Safety Division Standard

BARRICADE AND CONSTRUCTION CHANNELIZING DEVICES

BC(10)-21

FILE: bc-21.dgn	DN: TxDOT	CK: TxDOT	DW: TxDOT	CK: TxDOT
© TxDOT November 2002	CONT	SECT	JOB	HIGHWAY
REVISIONS 9-07 8-14, 7-13 5-21	DIST		COUNTY	SHEET NO. 17

DATE:
FILE:

104

DISCLAIMER:
The use of this standard is governed by the "Texas Engineering Practice Act". No warranty of any kind is made by TxDOT for any purpose whatsoever. TxDOT assumes no responsibility for the conversion of this standard to other formats or for incorrect results or damages resulting from its use.

WORK ZONE PAVEMENT MARKINGS

GENERAL

1. The Contractor shall be responsible for maintaining work zone and existing pavement markings, in accordance with the standard specifications and special provisions, on all roadways open to traffic within the CSJ limits unless otherwise stated in the plans.
2. Color, patterns and dimensions shall be in conformance with the "Texas Manual on Uniform Traffic Control Devices" (TMUTCD).
3. Additional supplemental pavement marking details may be found in the plans or specifications.
4. Pavement markings shall be installed in accordance with the TMUTCD and as shown on the plans.
5. When short term markings are required on the plans, short term markings shall conform with the TMUTCD, the plans and details as shown on the Standard Plan Sheet WZ(STPM).
6. When standard pavement markings are not in place and the roadway is opened to traffic, DO NOT PASS signs shall be erected to mark the beginning of the sections where passing is prohibited and PASS WITH CARE signs at the beginning of sections where passing is permitted.
7. All work zone pavement markings shall be installed in accordance with Item 662, "Work Zone Pavement Markings."

RAISED PAVEMENT MARKERS

1. Raised pavement markers are to be placed according to the patterns on BC(12).
2. All raised pavement markers used for work zone markings shall meet the requirements of Item 672, "RAISED PAVEMENT MARKERS" and Departmental Material Specification DMS-4200 or DMS-4300.

PREFABRICATED PAVEMENT MARKINGS

1. Removable prefabricated pavement markings shall meet the requirements of DMS-8241.
2. Non-removable prefabricated pavement markings (foil back) shall meet the requirements of DMS-8240.

MAINTAINING WORK ZONE PAVEMENT MARKINGS

1. The Contractor will be responsible for maintaining work zone pavement markings within the work limits.
2. Work zone pavement markings shall be inspected in accordance with the frequency and reporting requirements of work zone traffic control device inspections as required by Form 599.
3. The markings should provide a visible reference for a minimum distance of 300 feet during normal daylight hours and 160 feet when illuminated by automobile low-beam headlights at night, unless sight distance is restricted by roadway geometrics.
4. Markings failing to meet this criteria within the first 30 days after placement shall be replaced at the expense of the Contractor as per Specification Item 662.

REMOVAL OF PAVEMENT MARKINGS

1. Pavement markings that are no longer applicable, could create confusion or direct a motorist toward or into the closed portion of the roadway shall be removed or obliterated before the roadway is opened to traffic.
2. The above shall not apply to detours in place for less than three days, where flaggers and/or sufficient channelizing devices are used in lieu of markings to outline the detour route.
3. Pavement markings shall be removed to the fullest extent possible, so as not to leave a discernable marking. This shall be by any method approved by TxDOT Specification Item 677 for "Eliminating Existing Pavement Markings and Markers".
4. The removal of pavement markings may require resurfacing or seal coating portions of the roadway as described in Item 677.
5. Subject to the approval of the Engineer, any method that proves to be successful on a particular type pavement may be used.
6. Blast cleaning may be used but will not be required unless specifically shown in the plans.
7. Over-painting of the markings SHALL NOT BE permitted.
8. Removal of raised pavement markers shall be as directed by the Engineer.
9. Removal of existing pavement markings and markers will be paid for directly in accordance with Item 677, "ELIMINATING EXISTING PAVEMENT MARKINGS AND MARKERS," unless otherwise stated in the plans.
10. Black-out marking tape may be used to cover conflicting existing markings for periods less than two weeks when approved by the Engineer.

Temporary Flexible-Reflective Roadway Marker Tabs

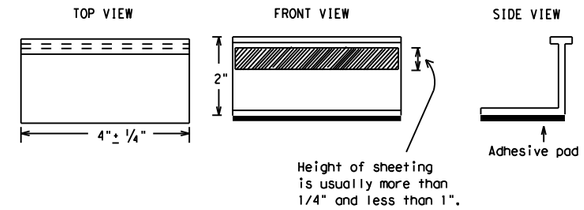

STAPLES OR NAILS SHALL NOT BE USED TO SECURE TEMPORARY FLEXIBLE-REFLECTIVE ROADWAY MARKER TABS TO THE PAVEMENT SURFACE

1. Temporary flexible-reflective roadway marker tabs used as guidemarks shall meet the requirements of DMS-8242.
2. Tabs detailed on this sheet are to be inspected and accepted by the Engineer or designated representative. Sampling and testing is not normally required, however at the option of the Engineer, either "A" or "B" below may be imposed to assure quality before placement on the roadway.
   A. Select five (5) or more tabs at random from each lot or shipment and submit to the Construction Division, Materials and Pavement Section to determine specification compliance.
   B. Select five (5) tabs and perform the following test. Affix five (5) tabs at 24 inch intervals on an asphaltic pavement in a straight line. Using a medium size passenger vehicle or pickup, run over the markers with the front and rear tires at a speed of 35 to 40 miles per hour, four (4) times in each direction. No more than one (1) out of the five (5) reflective surfaces shall be lost or displaced as a result of this test.
3. Small design variances may be noted between tab manufacturers.
4. See Standard Sheet WZ(STPM) for tab placement on new pavements. See Standard Sheet TCP(7-1) for tab placement on seal coat work.

RAISED PAVEMENT MARKERS USED AS GUIDEMARKS

1. Raised pavement markers used as guidemarks shall be from the approved product list, and meet the requirements of DMS-4200.
2. All temporary construction raised pavement markers provided on a project shall be of the same manufacturer.
3. Adhesive for guidemarks shall be bituminous material hot applied or butyl rubber pad for all surfaces, or thermoplastic for concrete surfaces.

Guidemarks shall be designated as:
YELLOW - (two amber reflective surfaces with yellow body).
WHITE - (one silver reflective surface with white body).

DEPARTMENTAL MATERIAL SPECIFICATIONS	
PAVEMENT MARKERS (REFLECTORIZED)	DMS-4200
TRAFFIC BUTTONS	DMS-4300
EPOXY AND ADHESIVES	DMS-6100
BITUMINOUS ADHESIVE FOR PAVEMENT MARKERS	DMS-6130
PERMANENT PREFABRICATED PAVEMENT MARKINGS	DMS-8240
TEMPORARY REMOVABLE, PREFABRICATED PAVEMENT MARKINGS	DMS-8241
TEMPORARY FLEXIBLE, REFLECTIVE ROADWAY MARKER TABS	DMS-8242

A list of prequalified reflective raised pavement markers, non-reflective traffic buttons, roadway marker tabs and other pavement markings can be found at the Material Producer List web address shown on BC(1).

Texas Department of Transportation — Traffic Safety Division Standard

BARRICADE AND CONSTRUCTION PAVEMENT MARKINGS

BC(11)-21

FILE: bc-21.dgn	DN: TxDOT	CK: TxDOT	DW: TxDOT	CK: TxDOT
© TxDOT February 1998	CONT	SECT	JOB	HIGHWAY
REVISIONS 2-98 9-07 5-21; 1-02 7-13; 11-02 8-14	DIST		COUNTY	SHEET NO. 18

105

DATE:
FILE:

PAVEMENT MARKING PATTERNS

REFLECTORIZED PAVEMENT MARKINGS - PATTERN A

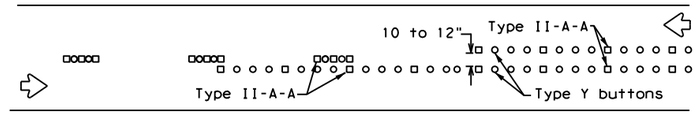

RAISED PAVEMENT MARKERS - PATTERN A

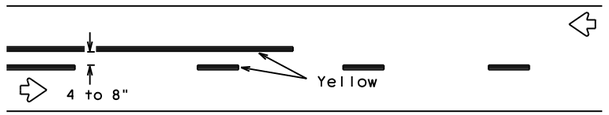

REFLECTORIZED PAVEMENT MARKINGS - PATTERN B

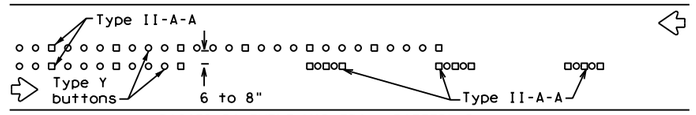

RAISED PAVEMENT MARKERS - PATTERN B

Pattern A is the TXDOT Standard, however Pattern B may be used if approved by the Engineer.
Prefabricated markings may be substituted for reflectorized pavement markings.

CENTER LINE & NO-PASSING ZONE BARRIER LINES FOR TWO-LANE, TWO-WAY HIGHWAYS

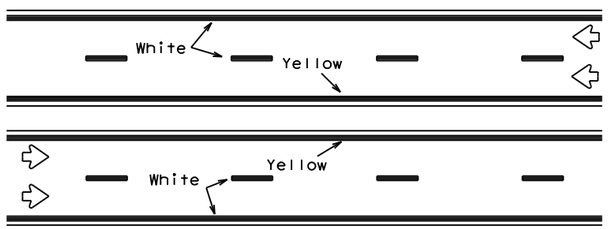

REFLECTORIZED PAVEMENT MARKINGS

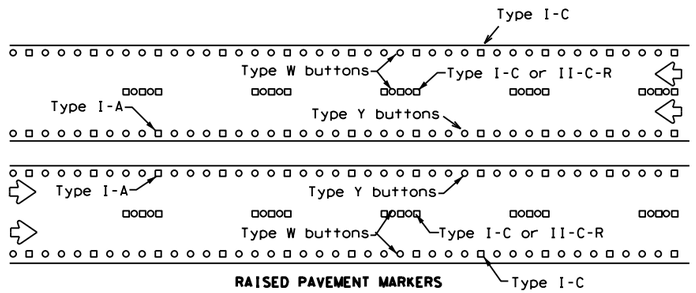

RAISED PAVEMENT MARKERS

Prefabricated markings may be substituted for reflectorized pavement markings.

EDGE & LANE LINES FOR DIVIDED HIGHWAY

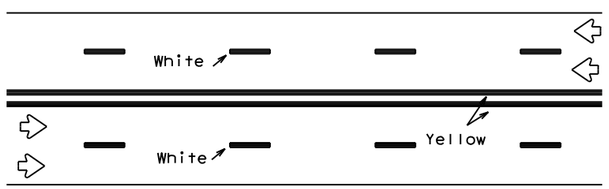

REFLECTORIZED PAVEMENT MARKINGS

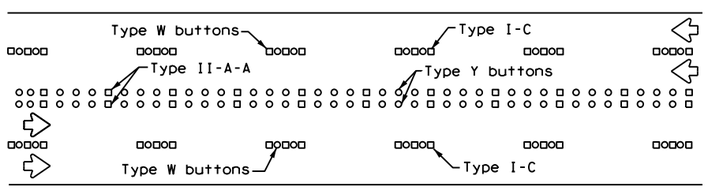

RAISED PAVEMENT MARKERS

Prefabricated markings may be substituted for reflectorized pavement markings.

LANE & CENTER LINES FOR MULTILANE UNDIVIDED HIGHWAYS

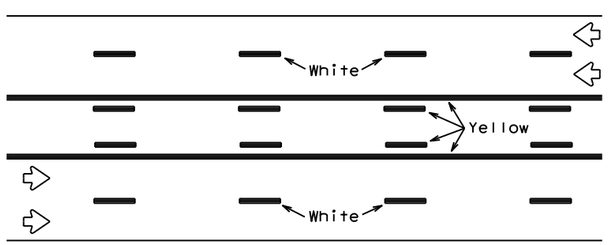

REFLECTORIZED PAVEMENT MARKINGS

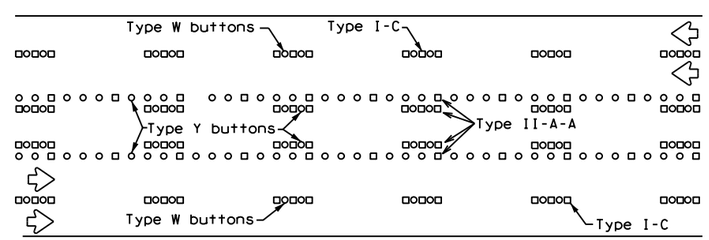

RAISED PAVEMENT MARKERS

Prefabricated markings may be substituted for reflectorized pavement markings.

TWO-WAY LEFT TURN LANE

STANDARD WORK ZONE PAVEMENT MARKINGS DETAILS

SOLID LINES

DOUBLE NO-PASSING LINE

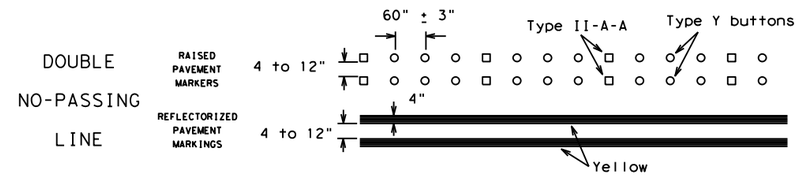

EDGE LINE OR SINGLE NO-PASSING LINE

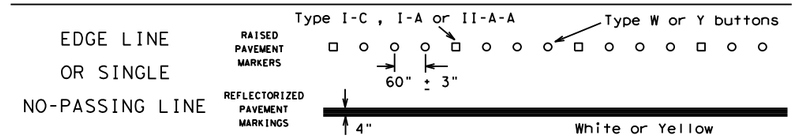

WIDE LINE

(FOR LEFT TURN CHANNELIZING LINE OR CHANNELIZING LINE USED TO DISCOURAGE LANE CHANGING.)

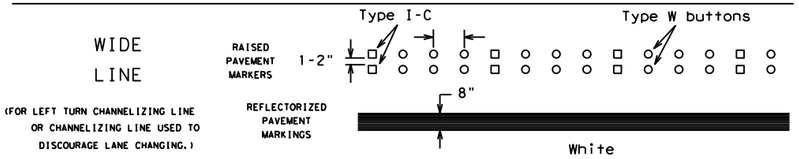

BROKEN LINES

CENTER LINE OR LANE LINE

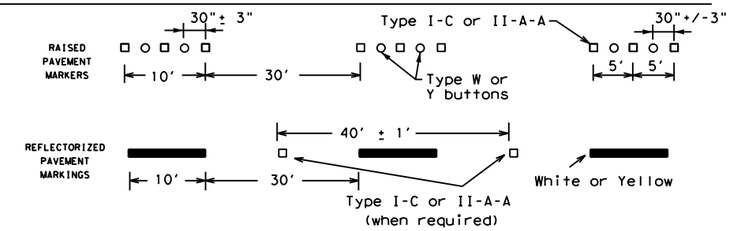

AUXILIARY OR LANEDROP LINE

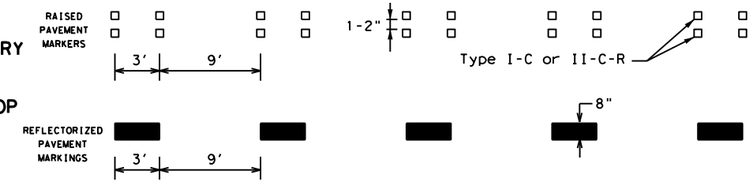

REMOVABLE MARKINGS WITH RAISED PAVEMENT MARKERS

If raised pavement markers are used to supplement REMOVABLE markings, the markers shall be applied to the top of the tape at the approximate mid length of tape used for broken lines or at 20 foot spacing for solid lines. This allows an easier removal of raised pavement markers and tape.

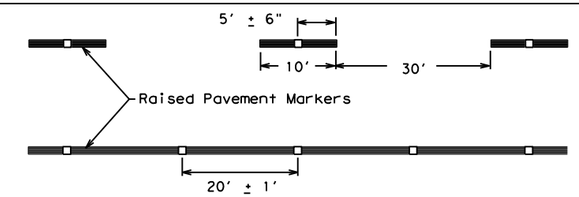

Centerline only - not to be used on edge lines

Raised pavement markers used as standard pavement markings shall be from the approved products list and meet the requirements of Item 672 "RAISED PAVEMENT MARKERS."

SHEET 12 OF 12

Texas Department of Transportation — Traffic Safety Division Standard

BARRICADE AND CONSTRUCTION PAVEMENT MARKING PATTERNS

BC(12)-21

FILE: bc-21.dgn	DN: TxDOT	CK: TxDOT	DW: TxDOT	CK: TxDOT
© TxDOT February 1998	CONT	SECT	JOB	HIGHWAY
REVISIONS 1-97 9-07 5-21 2-98 7-13 11-02 8-14	DIST		COUNTY	SHEET NO. 19

106

DISCLAIMER:
The use of this standard is governed by the "Texas Engineering Practice Act". No warranty of any kind is made by TxDOT for any purpose whatsoever. TxDOT assumes no responsibility for the conversion of this standard to other formats or for incorrect results or damages resulting from its use.

DATE:
FILE:

DISCLAIMER:
The use of this standard is governed by the "Texas Engineering Practice Act". No warranty of any kind is made by TxDOT for any purpose whatsoever. TxDOT assumes no responsibility for the conversion of this standard to other formats or for incorrect results or damages resulting from its use.

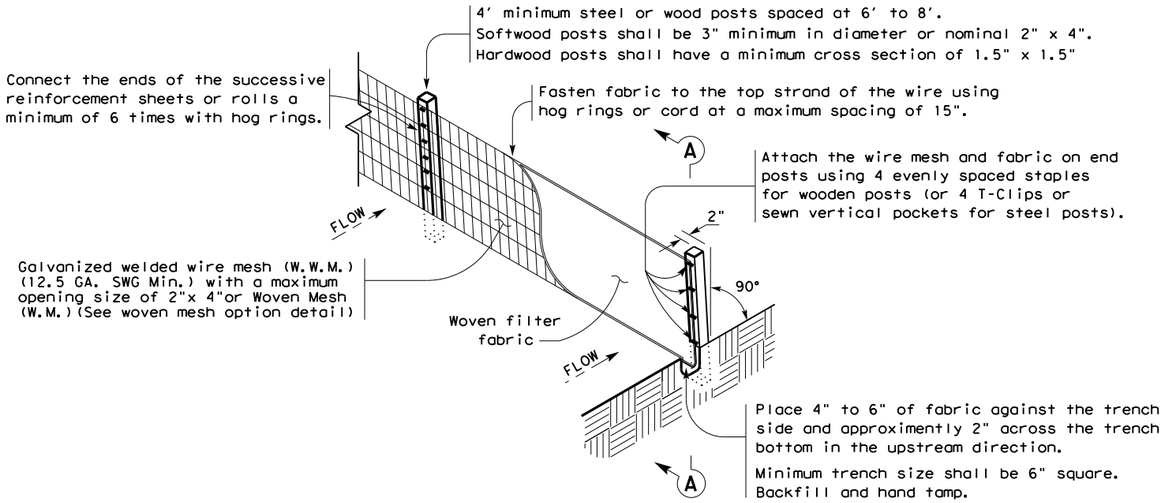

TEMPORARY SEDIMENT CONTROL FENCE

SCF

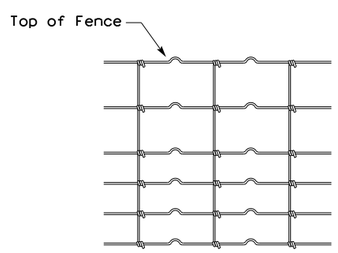

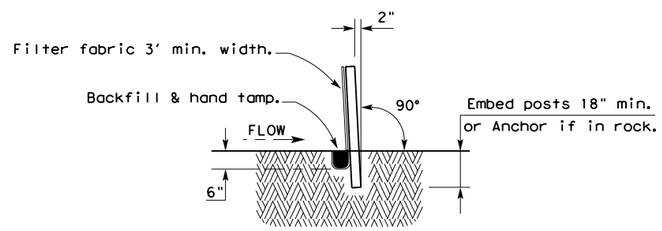

SECTION A-A

HINGE JOINT KNOT WOVEN MESH (OPTION) DETAIL

Galvanized hinge joint knot woven mesh (12.5 GA.SWG Min.) requires a minimum of five horizontal wires spaced at a maximum of 12 inches apart and all vertical wires spaced at a maximum of 12 inches apart.

SEDIMENT CONTROL FENCE USAGE GUIDELINES

A sediment control fence may be constructed near the downstream perimeter of a disturbed area along a contour to intercept sediment from overland runoff. A 2 year storm frequency may be used to calculate the flow rate to be filtered.

Sediment control fence should be sized to filter a maximum flow through rate of 100 GPM/FT^2. Sediment control fence is not recommended to control erosion from a drainage area larger than 2 acres.

LEGEND

Sediment Control Fence

SCF

GENERAL NOTES

1. Vertical tracking is required on projects where soil distributing activities have occurred unless otherwise approved.
2. Perform vertical tracking on slopes to temporarily stabilize soil.
3. Provide equipment with a track undercarriage capable of producing linear soil impressions measuring a minimum of 12" in length by 2" to 4" in width by 1/2" to 2" in depth.
4. Do not exceed 12" between track impressions.
5. Install continous linear track impressions where the minimum 12" length impressions are perpendicular to the slope or direction of water flow.

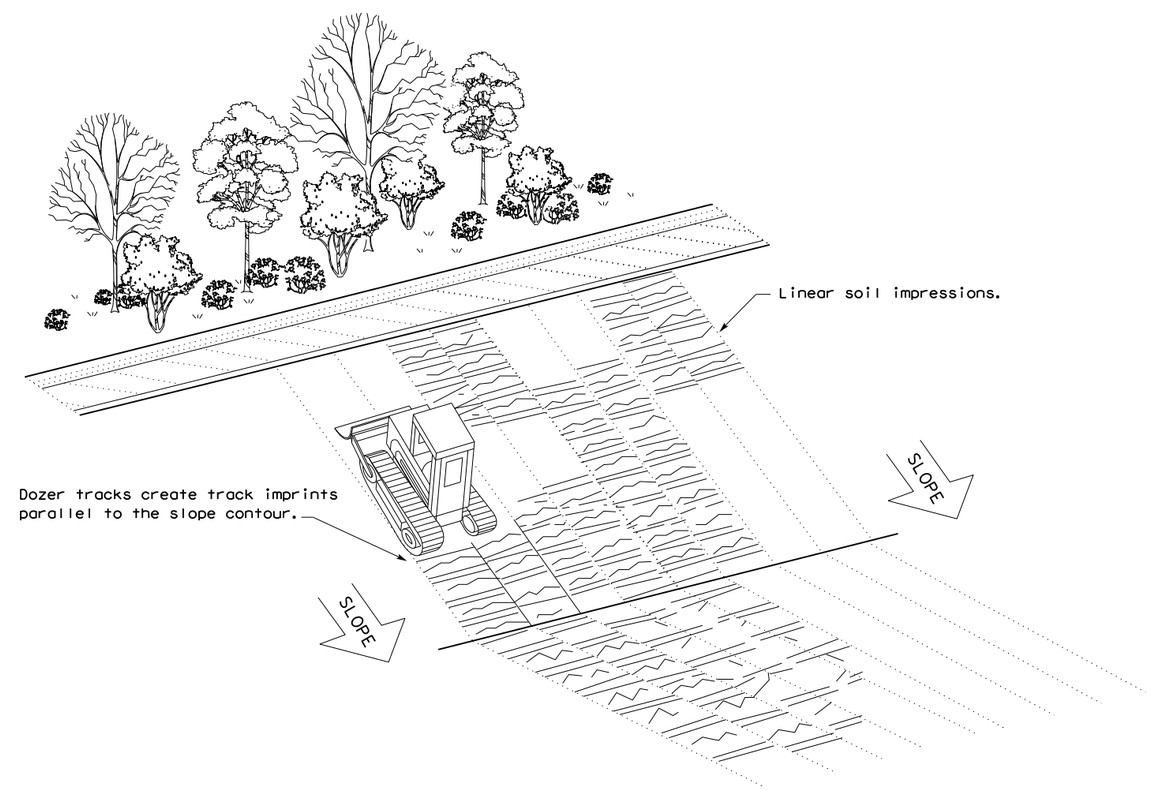

VERTICAL TRACKING

Texas Department of Transportation

Design Division Standard

TEMPORARY EROSION, SEDIMENT AND WATER POLLUTION CONTROL MEASURES

FENCE & VERTICAL TRACKING

EC(1)-16

FILE: ec116	DN: TxDOT	CK: KM	DW: VP	DN/CK: LS
© TxDOT: JULY 2016	CONT	SECT	JOB	HIGHWAY
REVISIONS				
	DIST	COUNTY		SHEET NO.
				20

DATE
FILE

DISCLAIMER:
The use of this standard is governed by the "Texas Engineering Practice Act". No warranty of any kind is made by TxDOT for any purpose whatsoever. TxDOT assumes no responsibility for the conversion of this standard to other formats or for incorrect results or damages resulting from its use.

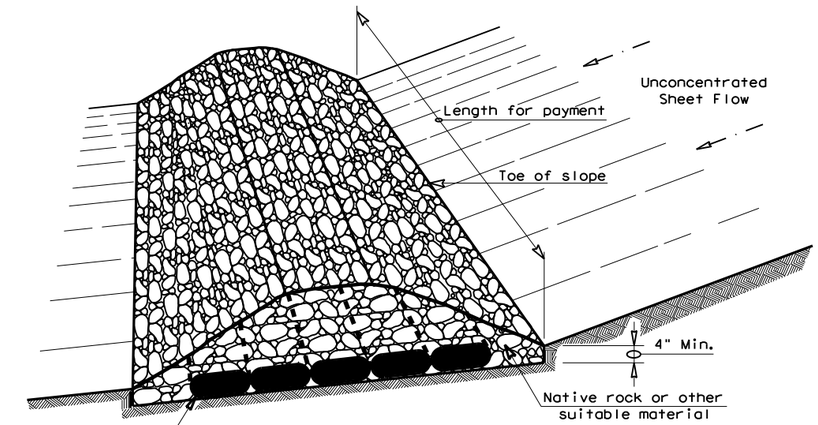

FILTER DAM AT TOE OF SLOPE

RFD1

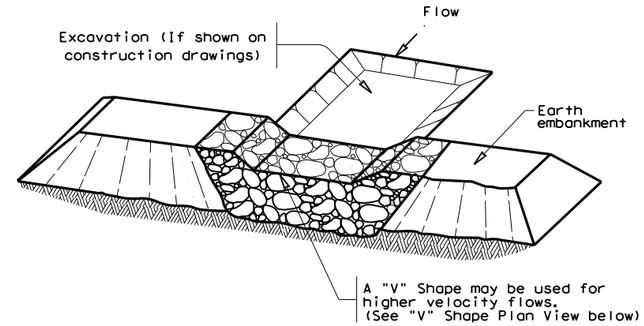

FILTER DAM AT SEDIMENT TRAP

RFD1 OR RFD2

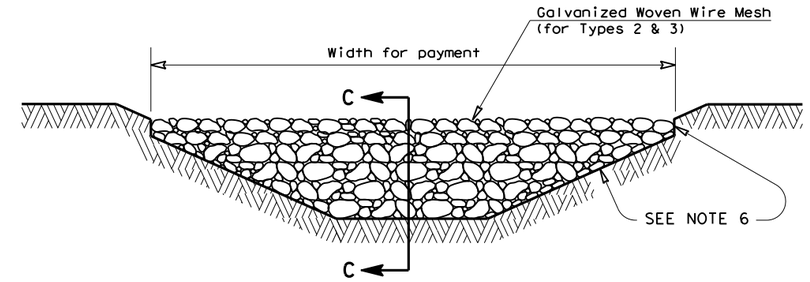

FILTER DAM AT CHANNEL SECTIONS

RFD1 OR RFD2 OR RFD3

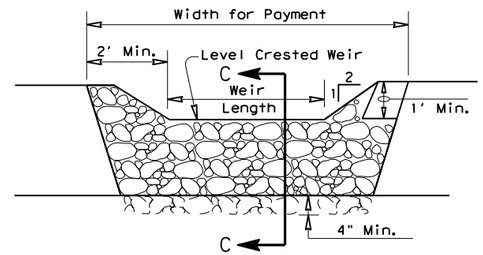

PROFILE

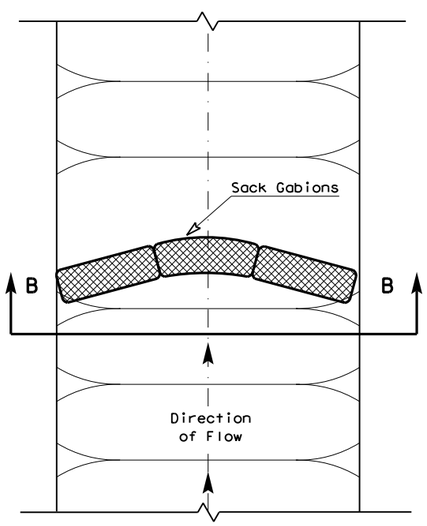

PLAN VIEW

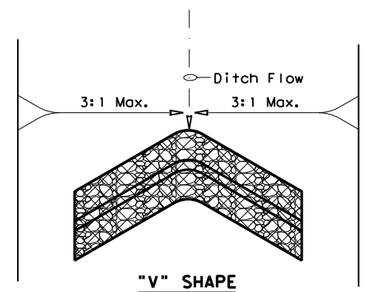

"V" SHAPE
PLAN VIEW

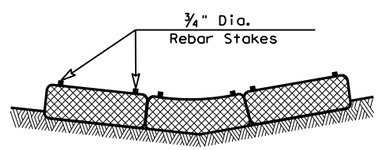

SECTION B-B

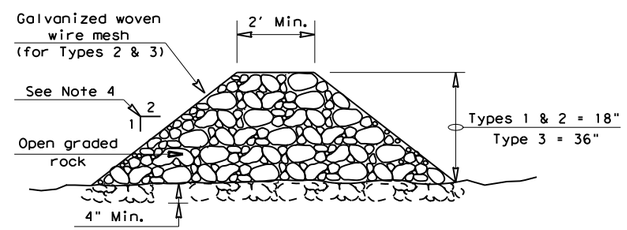

SECTION C-C

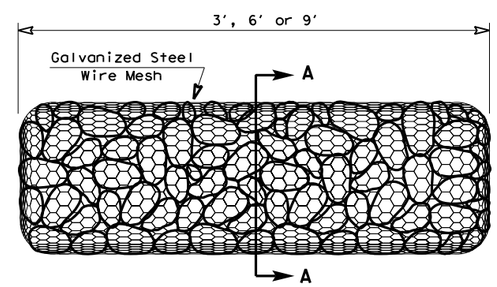

TYPE 4 (SACK GABIONS)

RFD4

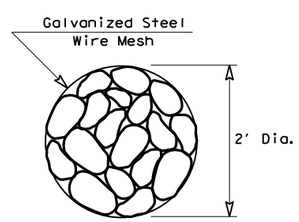

SECTION A-A

ROCK FILTER DAM USAGE GUIDELINES

Rock Filter Dams should be constructed downstream from disturbed areas to intercept sediment from overland runoff and/or concentrated flow. The dams should be sized to filter a maximum flow through rate of 60 GPM/FT^2 of cross sectional area. A 2 year storm frequency may be used to calculate the flow rate.

Type 1 (18" high with no wire mesh) (3" to 6" aggregate): Type 1 may be used at the toe of slopes, around inlets, in small ditches, and at dike or swale outlets. This type of dam is recommended to control erosion from a drainage area of 5 acres or less. Type 1 may not be used in concentrated high velocity flows (approximently 8 Ft/Sec or more) in which aggregate wash out may occur. Sandbags may be used at the embedded foundation (4" deep min.) for better filtering efficiency of low flows if called for on the plans or directed by the Engineer.

Type 2 (18" high with wire mesh) (3" to 6" aggregate): Type 2 may be used in ditches and at dike or swale outlets.

Type 3 (36" high with wire mesh) (4" to 8" aggregate): Type 3 may be used in stream flow and should be secured to the stream bed.

Type 4 (Sack gabions) (3" to 6" aggregate): Type 4 May be used in ditches and smaller channels to form an erosion control dam.

Type 5: Provide rock filter dams as shown on plans.

GENERAL NOTES

1. If shown on the plans or directed by the Engineer, filter dams should be placed near the toe of slopes where erosion is anticipated, upstream and/or downstream at drainage structures, and in roadway ditches and channels to collect sediment.
2. Materials (aggregate, wire mesh, sandbags, etc.) shall be as indicated by the specification for "Rock Filter Dams for Erosion and Sedimentation Control".
3. The rock filter dam dimensions shall be as indicated on the SW3P plans.
4. Side slopes should be 2:1 or flatter. Dams within the safety zone shall have sideslopes of 6:1 or flatter.
5. Maintain a minimum of 1' between top of rock filter dam weir and top of embankment for filter dams at sediment traps.
6. Filter dams should be embedded a minimum of 4" into existing ground.
7. The sediment trap for ponding of sediment laden runoff shall be of the dimensions shown on the plans.
8. Rock filter dam types 2 & 3 shall be secured with 20 gauge galvanized woven wire mesh with 1" diameter hexagonal openings. The aggregate shall be placed on the mesh to the height & slopes specified. The mesh shall be folded at the upstream side over the aggregate and tightly secured to itself on the downstream side using wire ties or hog rings. For in stream use, the mesh should be secured or staked to the stream bed prior to aggregate placement.
9. Sack Gabions should be staked down with ¾" dia. rebar stakes, and have a double-twisted hexagonal weave with a nominal mesh opening of 2 ½" x 3 ¼"
10. Flow outlet should be onto a stabilized area (vegetation, rock, etc.).
11. The guidelines shown hereon are suggestions only and may be modified by the Engineer.

PLAN SHEET LEGEND

Type 1 Rock Filter Dam	RFD1
Type 2 Rock Filter Dam	RFD2
Type 3 Rock Filter Dam	RFD3
Type 4 Rock Filter Dam	RFD4

Texas Department of Transportation — Design Division Standard

TEMPORARY EROSION, SEDIMENT AND WATER POLLUTION CONTROL MEASURES

ROCK FILTER DAMS

EC(2)-16

FILE: ec216	DN: TxDOT	CK: KM	DW: VP	DN/CK: LS
© TxDOT: JULY 2016	CONT	SECT	JOB	HIGHWAY
REVISIONS				
	DIST	COUNTY		SHEET NO.
				21

DATE:
FILE:

DISCLAIMER:
The use of this standard is governed by the "Texas Engineering Practice Act". No warranty of any kind is made by TxDOT for any purpose whatsoever. TxDOT assumes no responsibility for the conversion of this standard to other formats or for incorrect results or damages resulting from its use.

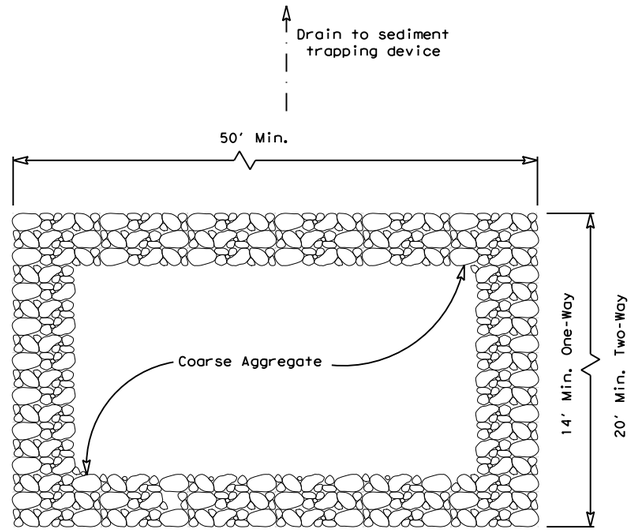

PLAN VIEW

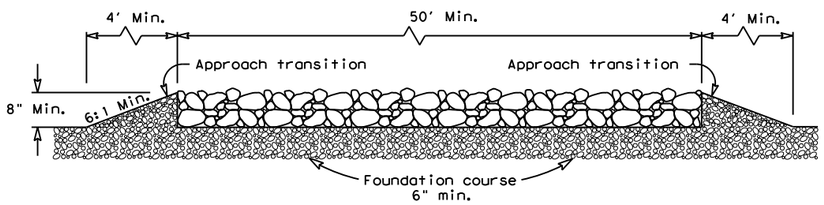

ELEVATION VIEW

CONSTRUCTION EXIT (TYPE 1)

ROCK CONSTRUCTION (LONG TERM)

GENERAL NOTES (TYPE 1)

1. The length of the type 1 construction exit shall be as indicated on the plans, but not less than 50'.
2. The coarse aggregate should be open graded with a size of 4" to 8".
3. The approach transitions should be no steeper than 6:1 and constructed as directed by the Engineer.
4. The construction exit foundation course shall be flexible base, bituminous concrete, portland cement concrete or other materialas approved by the Engineer.
5. The construction exit shall be graded to allow drainage to a sediment trapping device.
6. The guidelines shown hereon are suggestions only and may be modified by the Engineer.
7. Construct exits with a width of at least 14 ft. for one-way and 20 ft. for two-way traffic for the full width of the exit, or as directed by the engineer.

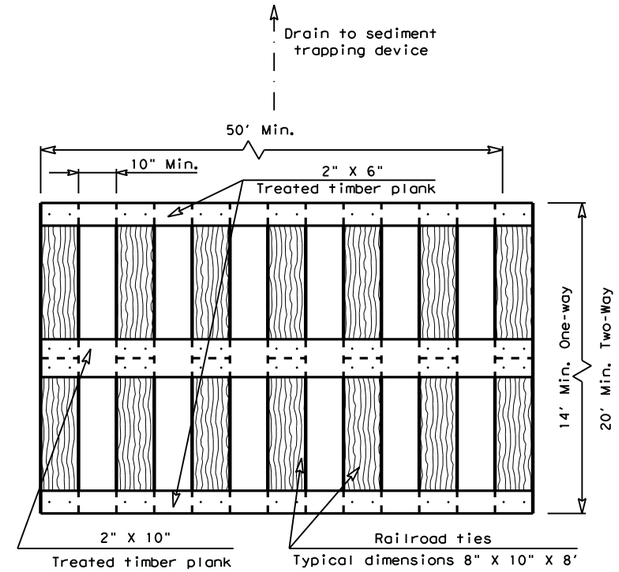

PLAN VIEW

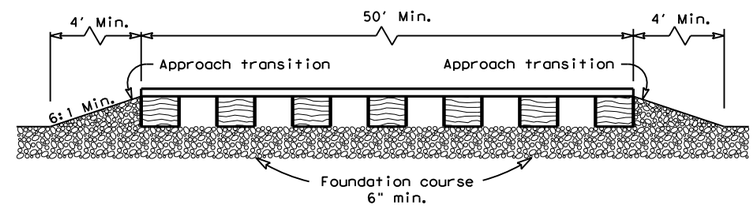

ELEVATION VIEW

CONSTRUCTION EXIT (TYPE 2)

TIMBER CONSTRUCTION (LONG TERM)

GENERAL NOTES (TYPE 2)

1. The length of the type 2 construction exit shall be as indicated on the plans, but not less than 50'.
2. The treated timber planks shall be attached to the railroad ties with ½"x 6" min. lag bolts. Other fasteners may be used as approved by the Engineer.
3. The treated timber planks shall be #2 grade min., and should be free from large and loose knots.
4. The approach transitions shall be no steeper than 6:1 and constructed as directed by the Engineer.
5. The construction exit foundation course shall be flexible base, bituminous concrete, portland cement concrete or other material as approved by the Engineer.
6. The construction exit should be graded to allow drainage to a sediment trapping device.
7. The guidelines shown hereon are suggestions only and may be modified by the Engineer.
8. Construct exits with a width of at least 14 ft. for one-way and 20 ft. for two-way traffic for the full width of the exit, or as directed by the engineer.

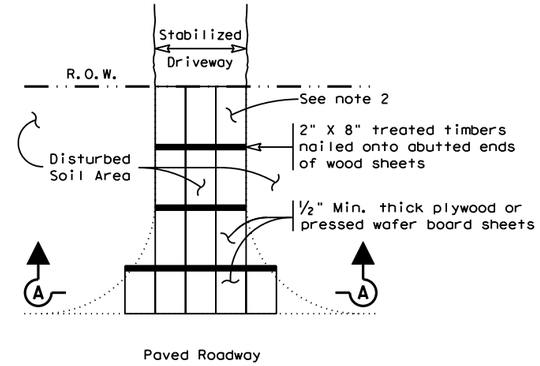

PLAN VIEW

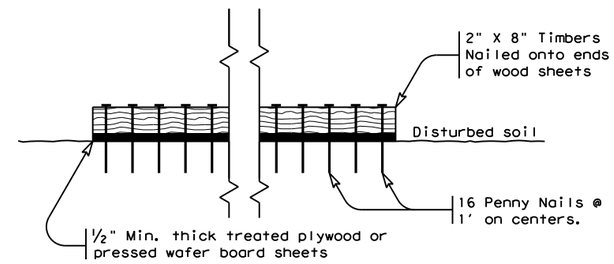

SECTION A-A

CONSTRUCTION EXIT (TYPE 3)

SHORT TERM

GENERAL NOTES (TYPE 3)

1. The length of the type 3 construction exit shall be as shown on the plans, or as directed by the Engineer.
2. The type 3 construction exit may be constructed from open graded crushed stone with a size of two to four inches spread a min. of 4" thick to the limits shown on the plans.
3. The treated timber planks shall be #2 grade min., and should be free from large and loose knots.
4. The guidelines shown hereon are suggestions only and may be modified by the Engineer.

Texas Department of Transportation — Design Division Standard

TEMPORARY EROSION, SEDIMENT AND WATER POLLUTION CONTROL MEASURES

CONSTRUCTION EXITS

EC(3)-16

Sheet 22

FILE: ec316	DN: TxDOT	CK: KM	DW: VP	DN/CK: LS
©TxDOT: JULY 2016	CONT	SECT	JOB	HIGHWAY
REVISIONS	C	S	J	HWY
	DIST		COUNTY	SHEET NO.
	DST		CTY	$EC(3)-16$

DATE: $DATE$
FILE: $FILE$

DISCLAIMER:
The use of this standard is governed by the "Texas Engineering Practice Act". No warranty of any kind is made by TxDOT for any purpose whatsoever.
TxDOT assumes no responsibility for the conversion of this standard to other formats or for incorrect results or damages resulting from its use.

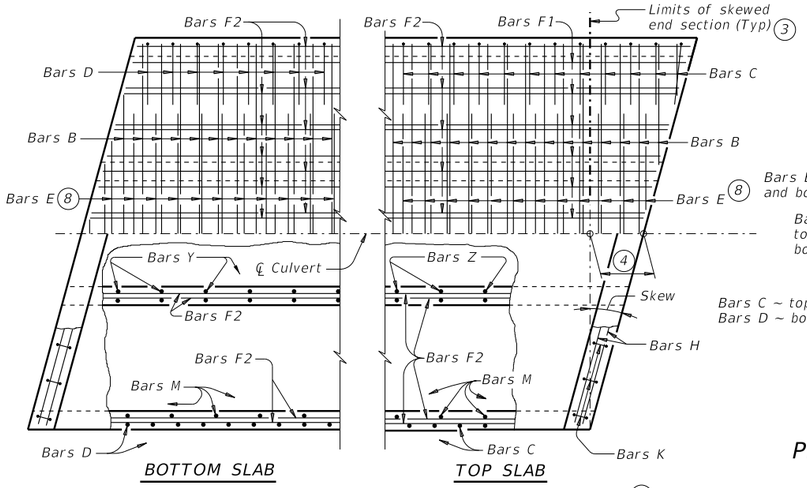

PLAN OF SKEWED ENDS ~ FROM 0° TO 15° 7

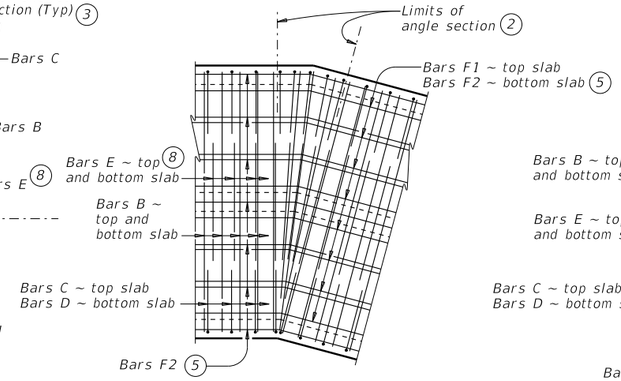

PLAN OF ANGLE SECTION ~ FROM 0° TO 15°

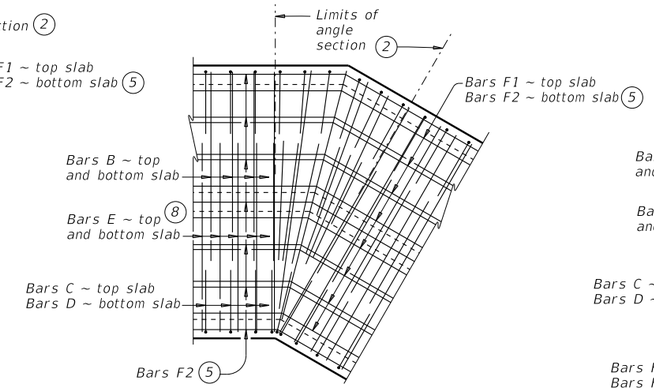

PLAN OF ANGLE SECTION ~ OVER 15° TO 30°

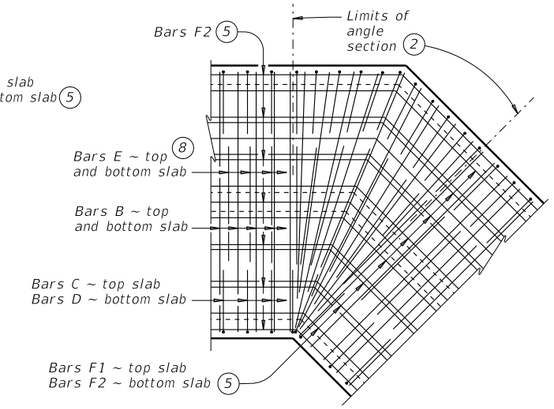

PLAN OF ANGLE SECTION ~ OVER 30° TO 45°

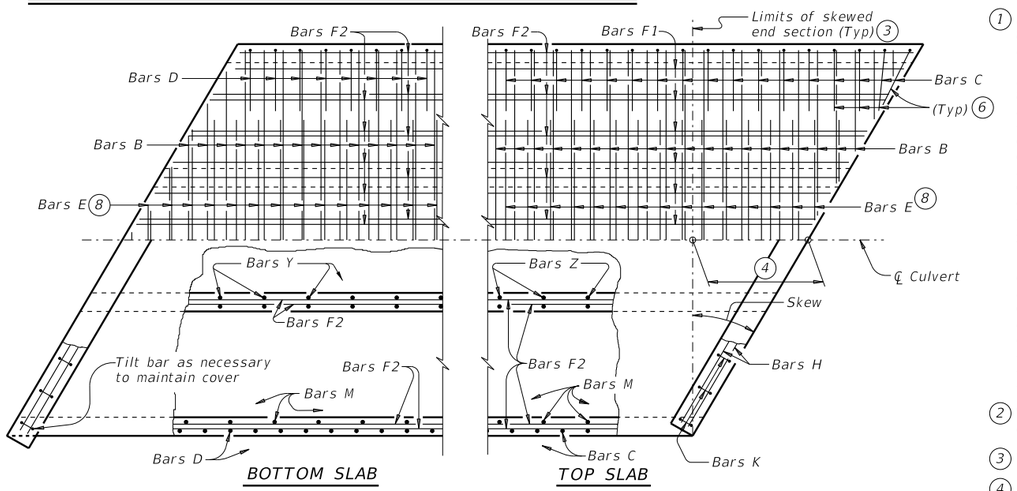

PLAN OF SKEWED ENDS ~ OVER 15° TO 30°

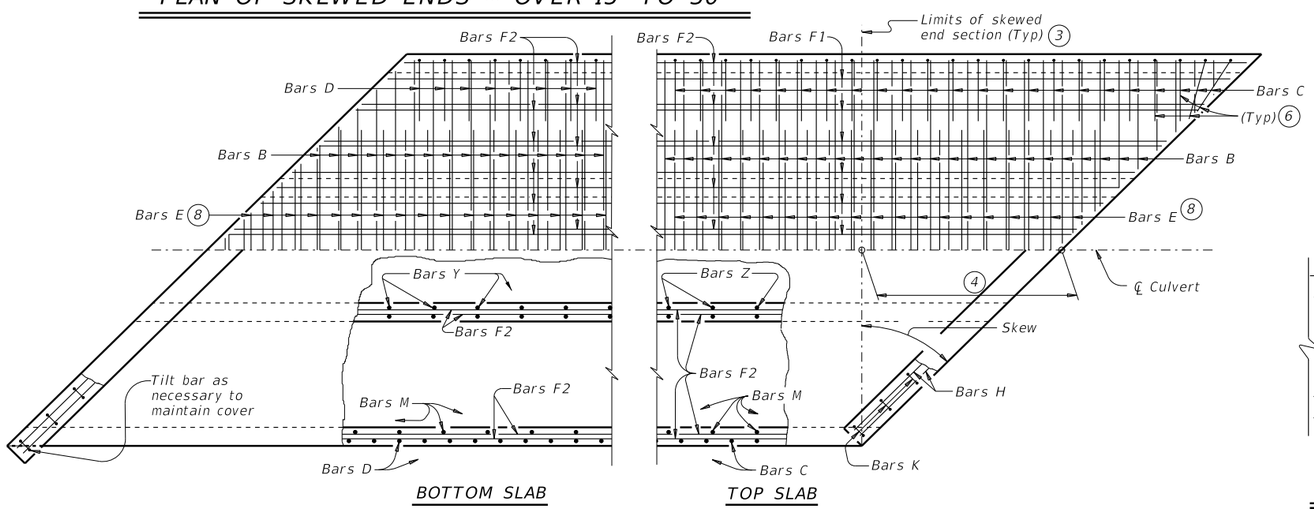

PLAN OF SKEWED ENDS ~ OVER 30° TO 45°

1. For skewed box culverts with less than 2'-0" of fill, break back the top slab to provide a 1'-10" minimum lap of the existing longitudinal bars with the longitudinal bars in the extension.
   For non-skewed box culverts with less than 2'-0" of fill and for skewed or non-skewed culverts with a fill depth of 2'-0" or greater, break back the top slab to provide a 1'-10" minimum lap of the existing longitudinal bars with the longitudinal bars in the extension. Alternatively, if the box is non-skewed, embed #6 anchor bars with a Type III, Class C, D, E, or F anchor adhesive into the existing walls, top and bottom slab at 1'-6" center-to-center spacing. Minimum embedment depth is 8". Anchor adhesive chosen must be able to achieve a basic bond strength in tension, Nba, of 26.4 kips. Submit signed and sealed calculations or the manufacturer's published literature showing the proposed anchor adhesive's ability to develop this load to the Engineer for approval prior to use. Anchor installation, including hole size, drilling, and clean out, must be in accordance with Item 450, "Railing." Test adhesive anchors in accordance with Item 450.3.3, "Tests." Test 3 anchors per 100 anchors installed.
   Break back wings and apron as necessary to install the extension. Clean and extend the exposed wingwall and apron reinforcing into the extension. When lengthening existing box culverts with dimensions different than current standard dimensions, form horizontal and vertical transitions as directed by the Engineer. Match bottom slabs to maintain an uninterrupted flow line. Field bend existing and new reinforcing into transitions and maintain specified cover requirements. For top slabs of culverts with overlay, with 1-to-2 course surface treatment, or with the top slab as the final riding surface, adjust the "H" dimension to provide a smooth riding surface.
2. When the spacing between Bars B or Bars E becomes less than half of the normal spacing, cut bars to avoid conflict.
3. The length of Bars B and Bars E will vary in the skewed end sections.
4. [One half of overall width] x [tangent of the skew angle]
5. Place Bars F1 and F2 continuously through the angle section. Bend Bars F1 and F2 to remain parallel to the walls of the box culvert.
6. When necessary to avoid conflict in acute corners, shorten the slab extension leg of Bars C and Bars D to a minimum of 1'-6" for skews of 30° thru 45°.
7. At the Contractor's option, for skews of 15° or less, place Bars B, C, D, and E parallel to the skewed end while maintaining spacing along centerline of box. Increase lengths of Bars B and Bars E shown on the Multiple Box Culverts Cast-In-Place (MC) standard sheets to accommodate the skew.
8. Extend Bars E as shown on the MC standard sheet for direct traffic culverts.

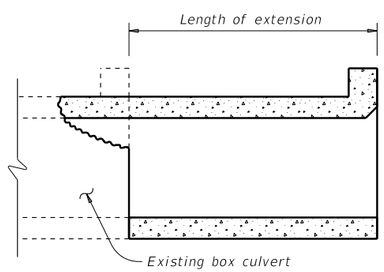

LENGTHENING DETAIL 1

CONSTRUCTION NOTES:

Do not use permanent forms.
When required, lap Bars H 1'-8" for uncoated or galvanized bars.
Provide a minimum of 1 ½" clear cover.

MATERIAL NOTES:

Provide Grade 60 reinforcing steel.
Provide galvanized reinforcing steel, if required elsewhere in the plans.
Provide Class C concrete (f'c = 3,600 psi) with these exceptions: provide Class S concrete (f'c = 4,000 psi) for top slabs of culverts with overlay, with 1-to-2 course surface treatment, or with the top slab as the final riding surface.

GENERAL NOTES:

Designed according to AASHTO LRFD Bridge Design Specifications.
Refer to Multiple Box Culverts Cast-in-Place (MC) standard sheets for details of straight sections of culvert.
For skewed sections and angle sections, refer to Multiple Box Culverts Cast-in-Place (MC) standard sheets for slab and wall dimensions, bar sizes, maximum bar spacing, and any other details not shown.
For skewed ends with curbs, adjust length of Bars H, number of Bars K, curb concrete volume, and reinforcing steel weight by dividing the values shown on the Multiple Box Culverts Cast-In-Place (MC) standard sheets by the cosine of the skew angle.

Cover dimensions are clear dimensions, unless noted otherwise.

HL93 LOADING

Texas Department of Transportation — Bridge Division Standard

MULTIPLE BOX CULVERTS CAST-IN-PLACE MISCELLANEOUS DETAILS

MC-MD

FILE: CD-MC-MD-20.dgn	DN: TxDOT	CK: TxDOT	DW: TxDOT	CK: TxDOT
©TxDOT February 2020	CONT	SECT	JOB	HIGHWAY
REVISIONS	DIST		COUNTY	SHEET NO.

DATE:
FILE:

DISCLAIMER:
The use of this standard is governed by the "Texas Engineering Practice Act". No warranty of any kind is made by TxDOT for any purpose whatsoever.
TxDOT assumes no responsibility for the conversion of this standard to other formats or for incorrect results or damages resulting from its use.

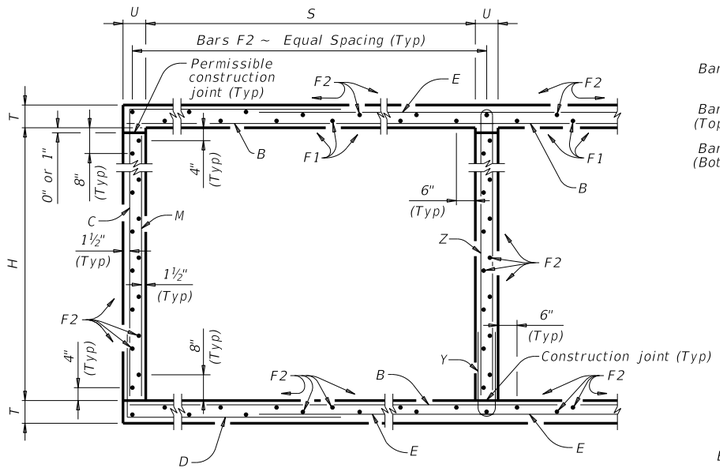

TYPICAL SECTION

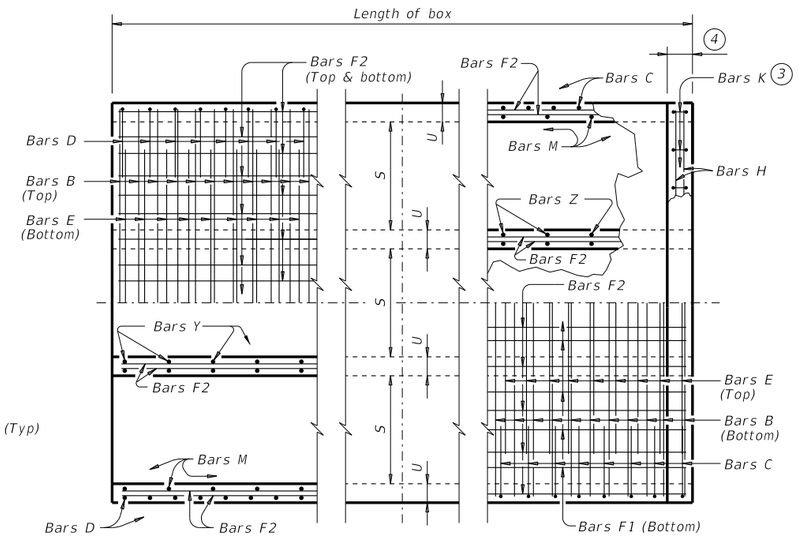

BOTTOM SLAB

TOP SLAB

PART PLANS

1 0" Min to 5'-0" Max. Estimated curb heights are shown elsewhere in the plans. For structures with pedestrian rail or curbs taller than 1'-0", refer to the Extended Curb Details (ECD) standard sheet. For structures with T631 or T631LS bridge rail, refer to the Mounting Details for T631 & T631LS Rails (T631-CM) standard sheet. Refer to the Rail Anchorage Curb (RAC) standard sheet for structures with bridge rail other than T631 or T631LS.

2 For vehicle safety, the following requirements must be met:
- For structures without bridge rail, construct curbs no more than 3" above finished grade.
- For structures with bridge rail, construct curbs flush with finished grade.

Reduce curb heights, if necessary, to meet the above requirements. No changes will be made in quantities and no additional compensation will be allowed for this work.

3 For curbs less than 1'-0" high, tilt Bars K or reduce bar height as necessary to maintain cover. For curbs less than 3" high, Bars K may be omitted.

4 1'-0" typical. 2'-3" when the Rail Anchorage Curb (RAC) standard sheet is referred to elsewhere in the plans.

The Contractor may replace Bars B, C, D, E, F1, F2, M, Y, and/or Z with deformed welded wire reinforcement (WWR) meeting the requirements of ASTM A1064. The area of required reinforcement may be reduced by the ratio of 60 ksi / 70 ksi. Spacing of WWR is limited to 4" Min and 18" Max. When required, provide lap splices in the WWR of the same length required for the equivalent bar size, rounded up for wire sizes between conventional bar sizes. The lap length required for WWR is never less than the lap length required for uncoated #4 bars.

Example conversion: Replacing No. 6 Gr 60 at 6" Spacing with WWR
Required WWR = (0.44 sq. in. per 0.5 ft.) x (60 ksi / 70 ksi) = 0.755 sq. in. per ft.
If D30.6 wire is used to meet the 0.755 sq. in. per ft. requirement in this example, the required spacing = (0.306 sq. in.) / (0.755 sq. in. per ft.) x (12 in. per ft.) = 4.86" Max spacing. Required lap length for the provided D30.6 wire is 2'-1" (the same minimum lap length required for uncoated #5 bars, as listed under MATERIAL NOTES).

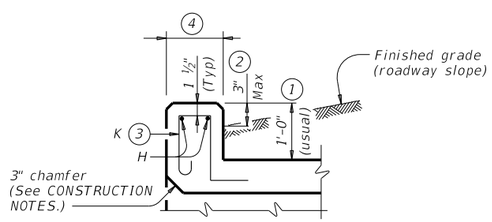

SECTION THRU CURB

TABLE OF BAR DIMENSIONS		
H	"X"	"Y"
3'-0"	3'-6 ½"	5'-1"
4'-0"	4'-6 ½"	5'-1"
5'-0"	5'-6 ½"	5'-1"
6'-0"	6'-6 ½"	5'-1"
7'-0"	7'-6 ½"	5'-1"
8'-0"	8'-6 ½"	5'-1"

CONSTRUCTION NOTES:

Do not use permanent forms.
Chamfer the bottom edge of the top slab 3" at the entrance.
Optionally, raise construction joints shown at the flow line by a maximum of 6". If this option is taken, Bars M may be cut off or raised, Bars C and D may be reversed, and Bars Y and Z may be reversed.

MATERIAL NOTES:

Provide Grade 60 reinforcing steel.
Provide galvanized reinforcing steel if required elsewhere in the plans.
Provide Class C concrete (f'c = 3,600 psi) for culvert barrel and curb, with the following exceptions: provide Class S concrete (f'c = 4,000 psi) for top slabs of:
- culverts with overlay,
- culverts with 1-to-2 course surface treatment, or
- culverts with the top slab as the final riding surface.

Provide bar laps, where required, as follows:
- Uncoated or galvanized ~ #4 = 1'-8" Min
- Uncoated or galvanized ~ #5 = 2'-1" Min
- Uncoated or galvanized ~ #6 = 2'-6" Min

GENERAL NOTES:

Designed according to AASHTO LRFD Bridge Design Specifications for the range of fill heights shown.
See the Multiple Box Culverts Cast-In-Place Miscellaneous Detail (MC-MD) standard sheet for details pertaining to skewed ends, angle sections, and lengthening.

Cover dimensions are clear dimensions, unless noted otherwise.
Reinforcing bar dimensions shown are out-to-out of bar.

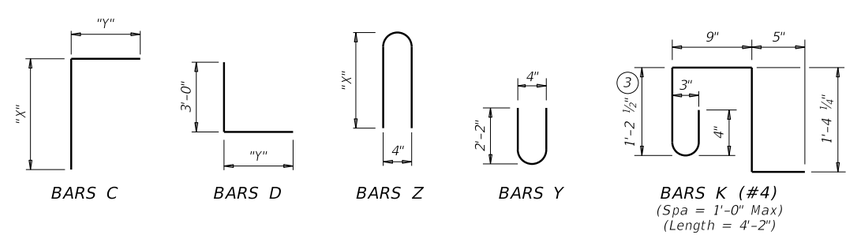

BARS C BARS D BARS Z BARS Y BARS K (#4)
(Spa = 1'-0" Max)
(Length = 4'-2")

HL93 LOADING SHEET 1 OF 2

Texas Department of Transportation — Bridge Division Standard

MULTIPLE BOX CULVERTS CAST-IN-PLACE
8'-0" SPAN
0' TO 13' FILL
MC-8-13

FILE: CD-MC813-20.dgn	DN: TBE	CK: BMP	DW: TxDOT	CK: TxDOT
©TxDOT February 2020	CONT	SECT	JOB	HIGHWAY
REVISIONS	DIST		COUNTY	SHEET NO.
				24

DATE:
FILE:

NUMBER OF SPANS	SECTION DIMENSIONS				BILLS OF REINFORCING STEEL (For Box Length = 40 feet)																																						QUANTITIES					
					Bars B					Bars C & D							Bars E					Bars F1 ~ #4				Bars F2 ~ #4				Bars M ~ #4				Bars Y & Z ~ #4								Bars H 4 ~ #4		Bars K		Per Foot of Barrel		Curb		Total	
	S	H	T	U	No.	Size	Spa	Length	Wt	No.	Size	Spa	Bars C Length	Bars C Wt	Bars D Length	Bars D Wt	No.	Size	Spa	Length	Wt	No.	Spa	Length	Wt	No.	Spa	Length	Wt	No.	Spa	Length	Wt	No.	Spa	Bars Y Length	Bars Y Wt	Bars Z Length	Bars Z Wt	Length	Wt	No.	Wt	Conc (CY)	Renf (Lb)	Conc (CY)	Renf (Lb)	Conc (CY)	Renf (Lb)
2	8' – 0"	3' – 0"	8"	7"	162	#6	6"	17' – 6"	4,258	108	#6	9"	8' – 8"	1,406	8' – 2"	1,325	162	#6	6"	12' – 9"	3,102	12	18"	39' – 9"	319	56	18"	39' – 9"	1,487	108	9"	3' – 0"	216	54	9"	4' – 7"	165	7' – 3"	262	17' – 6"	47	38	106	1.071	313.5	1.3	153	44.2	12,693
3	8' – 0"	3' – 0"	8"	7"	162	#6	6"	26' – 1"	6,347	108	#6	9"	8' – 8"	1,406	8' – 2"	1,325	162	#6	6"	21' – 4"	5,191	18	18"	39' – 9"	478	80	18"	39' – 9"	2,124	108	9"	3' – 0"	216	108	9"	4' – 7"	331	7' – 3"	523	26' – 1"	70	56	156	1.560	448.5	1.9	226	64.3	18,167
4	8' – 0"	3' – 0"	8"	7"	162	#6	6"	34' – 8"	8,435	108	#6	9"	8' – 8"	1,406	8' – 2"	1,325	162	#6	6"	29' – 11"	7,279	24	18"	39' – 9"	637	104	18"	39' – 9"	2,762	108	9"	3' – 0"	216	162	9"	4' – 7"	496	7' – 3"	785	34' – 8"	93	72	200	2.048	583.5	2.6	293	84.5	23,634
5	8' – 0"	3' – 0"	8"	7"	162	#6	6"	43' – 3"	10,524	108	#6	9"	8' – 8"	1,406	8' – 2"	1,325	162	#6	6"	38' – 6"	9,368	30	18"	39' – 9"	797	128	18"	39' – 9"	3,399	108	9"	3' – 0"	216	216	9"	4' – 7"	661	7' – 3"	1,046	43' – 3"	116	90	251	2.537	718.6	3.2	367	104.7	29,109
6	8' – 0"	3' – 0"	8"	7"	162	#6	6"	51' – 10"	12,612	108	#6	9"	8' – 8"	1,406	8' – 2"	1,325	162	#6	6"	47' – 1"	11,457	36	18"	39' – 9"	956	152	18"	39' – 9"	4,036	108	9"	3' – 0"	216	270	9"	4' – 7"	827	7' – 3"	1,308	51' – 10"	138	106	295	3.026	853.6	3.8	433	124.9	34,576
2	8' – 0"	4' – 0"	8"	7"	162	#6	6"	17' – 6"	4,258	108	#6	9"	9' – 8"	1,568	8' – 2"	1,325	162	#6	6"	12' – 9"	3,102	12	18"	39' – 9"	319	56	18"	39' – 9"	1,487	108	9"	4' – 0"	289	54	9"	4' – 7"	165	9' – 3"	334	17' – 6"	47	38	106	1.136	321.2	1.3	153	46.8	13,000
3	8' – 0"	4' – 0"	8"	7"	162	#6	6"	26' – 1"	6,347	108	#6	9"	9' – 8"	1,568	8' – 2"	1,325	162	#6	6"	21' – 4"	5,191	18	18"	39' – 9"	478	80	18"	39' – 9"	2,124	108	9"	4' – 0"	289	108	9"	4' – 7"	331	9' – 3"	667	26' – 1"	70	56	156	1.646	458.0	1.9	226	67.8	18,546
4	8' – 0"	4' – 0"	8"	7"	162	#6	6"	34' – 8"	8,435	108	#6	9"	9' – 8"	1,568	8' – 2"	1,325	162	#6	6"	29' – 11"	7,279	24	18"	39' – 9"	637	104	18"	39' – 9"	2,762	108	9"	4' – 0"	289	162	9"	4' – 7"	496	9' – 3"	1,001	34' – 8"	93	72	200	2.156	594.8	2.6	293	88.8	24,085
5	8' – 0"	4' – 0"	8"	7"	162	#6	6"	43' – 3"	10,524	108	#6	9"	9' – 8"	1,568	8' – 2"	1,325	162	#6	6"	38' – 6"	9,368	30	18"	39' – 9"	797	128	18"	39' – 9"	3,399	108	9"	4' – 0"	289	216	9"	4' – 7"	661	9' – 3"	1,335	43' – 3"	116	90	251	2.667	731.7	3.2	367	109.9	29,633
6	8' – 0"	4' – 0"	8"	7"	162	#6	6"	51' – 10"	12,612	108	#6	9"	9' – 8"	1,568	8' – 2"	1,325	162	#6	6"	47' – 1"	11,457	36	18"	39' – 9"	956	152	18"	39' – 9"	4,036	108	9"	4' – 0"	289	270	9"	4' – 7"	827	9' – 3"	1,668	51' – 10"	138	106	295	3.177	868.5	3.8	433	130.9	35,171
2	8' – 0"	5' – 0"	8"	7"	162	#6	6"	17' – 6"	4,258	108	#6	9"	10' – 8"	1,730	8' – 2"	1,325	162	#6	6"	12' – 9"	3,102	12	18"	39' – 9"	319	62	18"	39' – 9"	1,646	108	9"	5' – 0"	361	54	9"	4' – 7"	165	11' – 3"	406	17' – 6"	47	38	106	1.201	332.8	1.3	153	49.4	13,465
3	8' – 0"	5' – 0"	8"	7"	162	#6	6"	26' – 1"	6,347	108	#6	9"	10' – 8"	1,730	8' – 2"	1,325	162	#6	6"	21' – 4"	5,191	18	18"	39' – 9"	478	88	18"	39' – 9"	2,337	108	9"	5' – 0"	361	108	9"	4' – 7"	331	11' – 3"	812	26' – 1"	70	56	156	1.733	472.8	1.9	226	71.3	19,138
4	8' – 0"	5' – 0"	8"	7"	162	#6	6"	34' – 8"	8,435	108	#6	9"	10' – 8"	1,730	8' – 2"	1,325	162	#6	6"	29' – 11"	7,279	24	18"	39' – 9"	637	114	18"	39' – 9"	3,027	108	9"	5' – 0"	361	162	9"	4' – 7"	496	11' – 3"	1,217	34' – 8"	93	72	200	2.264	612.7	2.6	293	93.1	24,800
5	8' – 0"	5' – 0"	8"	7"	162	#6	6"	43' – 3"	10,524	108	#6	9"	10' – 8"	1,730	8' – 2"	1,325	162	#6	6"	38' – 6"	9,368	30	18"	39' – 9"	797	140	18"	39' – 9"	3,717	108	9"	5' – 0"	361	216	9"	4' – 7"	661	11' – 3"	1,623	43' – 3"	116	90	251	2.796	752.7	3.2	367	115.1	30,473
6	8' – 0"	5' – 0"	8"	7"	162	#6	6"	51' – 10"	12,612	108	#6	9"	10' – 8"	1,730	8' – 2"	1,325	162	#6	6"	47' – 1"	11,457	36	18"	39' – 9"	956	166	18"	39' – 9"	4,408	108	9"	5' – 0"	361	270	9"	4' – 7"	827	11' – 3"	2,029	51' – 10"	138	106	295	3.328	892.6	3.8	433	137.0	36,138
2	8' – 0"	6' – 0"	8"	7"	162	#6	6"	17' – 6"	4,258	108	#6	9"	11' – 8"	1,893	8' – 2"	1,325	162	#6	6"	12' – 9"	3,102	12	18"	39' – 9"	319	68	18"	39' – 9"	1,806	108	9"	6' – 0"	433	54	9"	4' – 7"	165	13' – 3"	478	17' – 6"	47	38	106	1.265	344.5	1.3	153	51.9	13,932
3	8' – 0"	6' – 0"	8"	7"	162	#6	6"	26' – 1"	6,347	108	#6	9"	11' – 8"	1,893	8' – 2"	1,325	162	#6	6"	21' – 4"	5,191	18	18"	39' – 9"	478	96	18"	39' – 9"	2,549	108	9"	6' – 0"	433	108	9"	4' – 7"	331	13' – 3"	956	26' – 1"	70	56	156	1.819	487.6	1.9	226	74.7	19,729
4	8' – 0"	6' – 0"	8"	7"	162	#6	6"	34' – 8"	8,435	108	#6	9"	11' – 8"	1,893	8' – 2"	1,325	162	#6	6"	29' – 11"	7,279	24	18"	39' – 9"	637	124	18"	39' – 9"	3,293	108	9"	6' – 0"	433	162	9"	4' – 7"	496	13' – 3"	1,434	34' – 8"	93	72	200	2.372	630.6	2.6	293	97.5	25,518
5	8' – 0"	6' – 0"	8"	7"	162	#6	6"	43' – 3"	10,524	108	#6	9"	11' – 8"	1,893	8' – 2"	1,325	162	#6	6"	38' – 6"	9,368	30	18"	39' – 9"	797	152	18"	39' – 9"	4,036	108	9"	6' – 0"	433	216	9"	4' – 7"	661	13' – 3"	1,912	43' – 3"	116	90	251	2.926	773.7	3.2	367	120.3	31,316
6	8' – 0"	6' – 0"	8"	7"	162	#6	6"	51' – 10"	12,612	108	#6	9"	11' – 8"	1,893	8' – 2"	1,325	162	#6	6"	47' – 1"	11,457	36	18"	39' – 9"	956	180	18"	39' – 9"	4,780	108	9"	6' – 0"	433	270	9"	4' – 7"	827	13' – 3"	2,390	51' – 10"	138	106	295	3.479	916.8	3.8	433	143.0	37,106
2	8' – 0"	7' – 0"	8"	7"	162	#6	6"	17' – 6"	4,258	108	#6	9"	12' – 8"	2,055	8' – 2"	1,325	162	#6	6"	12' – 9"	3,102	12	18"	39' – 9"	319	68	18"	39' – 9"	1,806	108	9"	7' – 0"	505	54	9"	4' – 7"	165	15' – 3"	550	17' – 6"	47	38	106	1.330	352.1	1.3	153	54.5	14,238
3	8' – 0"	7' – 0"	8"	7"	162	#6	6"	26' – 1"	6,347	108	#6	9"	12' – 8"	2,055	8' – 2"	1,325	162	#6	6"	21' – 4"	5,191	18	18"	39' – 9"	478	96	18"	39' – 9"	2,549	108	9"	7' – 0"	505	108	9"	4' – 7"	331	15' – 3"	1,100	26' – 1"	70	56	156	1.905	497.0	1.9	226	78.1	20,107
4	8' – 0"	7' – 0"	8"	7"	162	#6	6"	34' – 8"	8,435	108	#6	9"	12' – 8"	2,055	8' – 2"	1,325	162	#6	6"	29' – 11"	7,279	24	18"	39' – 9"	637	124	18"	39' – 9"	3,293	108	9"	7' – 0"	505	162	9"	4' – 7"	496	15' – 3"	1,650	34' – 8"	93	72	200	2.480	641.9	2.6	293	101.8	25,968
5	8' – 0"	7' – 0"	8"	7"	162	#6	6"	43' – 3"	10,524	108	#6	9"	12' – 8"	2,055	8' – 2"	1,325	162	#6	6"	38' – 6"	9,368	30	18"	39' – 9"	797	152	18"	39' – 9"	4,036	108	9"	7' – 0"	505	216	9"	4' – 7"	661	15' – 3"	2,200	43' – 3"	116	90	251	3.056	786.8	3.2	367	125.5	31,838
6	8' – 0"	7' – 0"	8"	7"	162	#6	6"	51' – 10"	12,612	108	#6	9"	12' – 8"	2,055	8' – 2"	1,325	162	#6	6"	47' – 1"	11,457	36	18"	39' – 9"	956	180	18"	39' – 9"	4,780	108	9"	7' – 0"	505	270	9"	4' – 7"	827	15' – 3"	2,750	51' – 10"	138	106	295	3.631	931.7	3.8	433	149.1	37,700
2	8' – 0"	8' – 0"	8"	7"	162	#6	6"	17' – 6"	4,258	108	#6	9"	13' – 8"	2,217	8' – 2"	1,325	162	#6	6"	12' – 9"	3,102	12	18"	39' – 9"	319	74	18"	39' – 9"	1,965	108	9"	8' – 0"	577	54	9"	4' – 7"	165	17' – 3"	622	17' – 6"	47	38	106	1.395	363.8	1.3	153	57.1	14,703
3	8' – 0"	8' – 0"	8"	7"	162	#6	6"	26' – 1"	6,347	108	#6	9"	13' – 8"	2,217	8' – 2"	1,325	162	#6	6"	21' – 4"	5,191	18	18"	39' – 9"	478	104	18"	39' – 9"	2,762	108	9"	8' – 0"	577	108	9"	4' – 7"	331	17' – 3"	1,244	26' – 1"	70	56	156	1.992	511.8	1.9	226	81.6	20,698
4	8' – 0"	8' – 0"	8"	7"	162	#6	6"	34' – 8"	8,435	108	#6	9"	13' – 8"	2,217	8' – 2"	1,325	162	#6	6"	29' – 11"	7,279	24	18"	39' – 9"	637	134	18"	39' – 9"	3,558	108	9"	8' – 0"	577	162	9"	4' – 7"	496	17' – 3"	1,867	34' – 8"	93	72	200	2.588	659.8	2.6	293	106.1	26,684
5	8' – 0"	8' – 0"	8"	7"	162	#6	6"	43' – 3"	10,524	108	#6	9"	13' – 8"	2,217	8' – 2"	1,325	162	#6	6"	38' – 6"	9,368	30	18"	39' – 9"	797	164	18"	39' – 9"	4,355	108	9"	8' – 0"	577	216	9"	4' – 7"	661	17' – 3"	2,489	43' – 3"	116	90	251	3.185	807.8	3.2	367	130.6	32,680
6	8' – 0"	8' – 0"	8"	7"	162	#6	6"	51' – 10"	12,612	108	#6	9"	13' – 8"	2,217	8' – 2"	1,325	162	#6	6"	47' – 1"	11,457	36	18"	39' – 9"	956	194	18"	39' – 9"	5,151	108	9"	8' – 0"	577	270	9"	4' – 7"	827	17' – 3"	3,111	51' – 10"	138	106	295	3.782	955.8	3.8	433	155.1	38,666

DISCLAIMER:
The use of this standard is governed by the "Texas Engineering Practice Act". No warranty of any kind is made by TxDOT for any purpose whatsoever. TxDOT assumes no responsibility for the conversion of this standard to other formats or for incorrect results or damages resulting from its use.

DATE:
FILE:

HL93 LOADING SHEET 2 OF 2

Texas Department of Transportation — Bridge Division Standard

MULTIPLE BOX CULVERTS CAST-IN-PLACE

8'-0" SPAN
0' TO 13' FILL

MC-8-13

FILE: CD-MC813-20.dgn	DN: TBE	CK: BMP	DW: TxDOT	CK: TxDOT
©TxDOT February 2020	CONT	SECT	JOB	HIGHWAY
REVISIONS				
	DIST	COUNTY		SHEET NO.
				25

DISCLAIMER:
The use of this standard is governed by the "Texas Engineering Practice Act". No warranty of any kind is made by TxDOT for any purpose whatsoever.
TxDOT assumes no responsibility for the conversion of this standard to other formats or for incorrect results or damages resulting from its use.

TABLE OF DIMENSIONS AND REINFORCING STEEL
(Wings for one structure end)

Dimensions					Variable Reinforcing				Estimated Quantities per ft of wing (2~wings) (4)		Estimated Quantities per ft of Toewall (1~toewall)	
Maximum Wingwall Height Hw	W	X	Y	Z	Bars J1		Bars J2					
					Size	Spa	Size	Spa	Reinf Lb/Ft)	Conc (CY/Ft)	Reinf (Lb/Ft)	Conc (CY/Ft)
2'-6"	2'-10"	10"	1'-0"	7"	#4	1'-0"	#4	1'-0"	48.64	0.406	6.85	0.071
2'-9"	2'-10"	10"	1'-0"	7"	#4	1'-0"	#4	1'-0"	49.31	0.424	6.85	0.071
3'-0"	2'-10"	10"	1'-0"	7"	#4	1'-0"	#4	1'-0"	49.98	0.444	6.85	0.071
3'-3"	2'-10"	10"	1'-0"	7"	#4	1'-0"	#4	1'-0"	53.32	0.462	6.85	0.071
3'-6"	2'-10"	10"	1'-0"	7"	#4	1'-0"	#4	1'-0"	53.98	0.480	6.85	0.071
4'-0"	3'-2"	1'-2"	1'-0"	7"	#4	1'-0"	#4	1'-0"	55.77	0.532	6.85	0.071
4'-6"	3'-2"	1'-2"	1'-0"	7"	#4	1'-0"	#4	1'-0"	59.77	0.568	6.85	0.071
5'-0"	3'-9"	1'-7"	1'-2"	7"	#4	1'-0"	#4	1'-0"	63.45	0.632	6.96	0.075
5'-6"	3'-9"	1'-7"	1'-2"	7"	#4	1'-0"	#4	1'-0"	67.46	0.668	6.96	0.075
6'-0"	4'-4"	2'-0"	1'-4"	7"	#5	1'-0"	#5	1'-0"	80.67	0.730	7.07	0.078
6'-6"	4'-4"	2'-0"	1'-4"	7"	#5	1'-0"	#5	1'-0"	85.05	0.768	7.07	0.078
7'-0"	5'-0"	2'-3"	1'-9"	8"	#5	1'-0"	#5	1'-0"	92.15	0.864	8.07	0.093
7'-6"	5'-0"	2'-3"	1'-9"	8"	#5	1'-0"	#5	1'-0"	96.54	0.902	8.07	0.093
8'-0"	5'-6"	2'-8"	1'-10"	8"	#5	6"	#5	6"	139.04	0.962	8.13	0.095
8'-6"	5'-6"	2'-8"	1'-10"	8"	#5	6"	#5	6"	144.47	1.000	8.13	0.095
9'-6"	6'-0"	2'-10"	2'-2"	9"	#5	6"	#5	6"	156.93	1.136	8.41	0.110
10'-6"	6'-5"	3'-0"	2'-5"	9"	#6	6"	#5	6"	196.27	1.234	8.57	0.117
11'-6"	7'-2"	3'-6"	2'-8"	11"	#6	6"	#6	6"	230.13	1.438	9.52	0.140
12'-6"	7'-8"	3'-9"	2'-11"	1'-0"	#7	6"	#6	6"	283.41	1.592	9.74	0.157
13'-6"	8'-2"	4'-0"	3'-2"	1'-2"	#8	6"	#6	6"	348.72	1.804	10.02	0.186
14'-6"	8'-10"	4'-5"	3'-5"	1'-4"	#9	6"	#6	6"	432.94	2.046	10.30	0.218
15'-6"	9'-6"	4'-10"	3'-8"	1'-6"	#9	6"	#7	6"	489.52	2.302	11.24	0.253
16'-0"	9'-11"	5'-0"	3'-11"	1'-7"	#9	6"	#7	6"	505.72	2.448	11.47	0.279

TABLE OF WINGWALL REINFORCING
(2~wings)

Bar	Size	No.	Spa
D1	#6	~	1'-0"
D2	#6	~	1'-0"
E1	#4	~	1'-0"
F	#4	~	1'-0"
G	#6	~	8"
M1	#4	4	~
P	#4	~	1'-0"
V	#4	~	1'-0"

TABLE OF TOEWALL REINFORCING

Bar	Size	No.	Spa
J3	#4	~	1'-0"
M2	#4	2	~
E2	#4	~	1'-0"

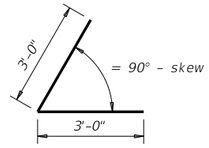

BARS D1

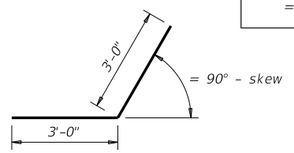

BARS D2

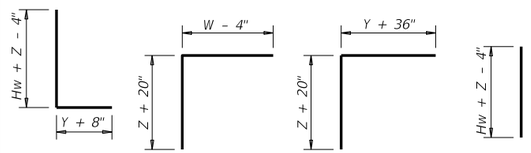

BARS J1 BARS J2 BARS J3 BARS V

WING DIMENSION FORMULAS:

(All values are in feet.)

Hw = H + T + C
Lw = (Hw) (SL) ÷ cosine (θ) for Type PW-1
= (Hw - 1') (SL) ÷ cosine (θ) for Type PW-2 and Hw ≥ 4'
= (Hw - 0.5') (SL) ÷ cosine (θ) for Type PW-2 and Hw < 4'

For cast-in-place culverts:
Ltw = [(N) (S) + (N + 1) (U)] ÷ cosine (θ)

For precast culverts:
Ltw = [(N) (2 U + S) + (N - 1) (0.5')] ÷ cosine (θ)
Total Wingwall Area (two wings ~ SF)
= (2)(Hw)(Lw) for Type PW-1
= (2)(Hw)(Lw) - 6 SF for Type PW-2 and Hw ≥ 4'
= (2)(Hw)(Lw) - 1.5 SF for Type PW-2 and Hw < 4'

Hw = Height of wingwall
Lw = Length of wingwall
Ltw = Culvert toewall length
N = Number of culvert spans
SL:1 = Channel slope ratio. (horizontal: 1 vertical, usual value is 2:1)
θ = Culvert skew

See applicable box culvert standard sheet for S, H, T, and U values.

1. Skew = 0°
2. At discharge end, chamfer may be ¾" minimum.
3. For 15° skew ~ 1"
   For 30° skew ~ 2"
   For 45° skew ~ 3"
4. Quantities shown are for two Type PW-1 wings. Adjust concrete volume for Type PW-2 wings. To determine estimated quantities for two wings, multiply the tabulated values by Lw. Quantities shown do not include weight of Bars D.
5. Provide weepholes for Hw = 5'-0" and greater. Fill around weepholes with coarse gravel.
6. Extend Bars E2 1'-6" minimum into the wingwall footing.
7. Lap Bars M1 1'-6" minimum with Bars M2.
8. Place Bars G as shown, equally spaced at 8" maximum. Provide at least two pairs of Bars G per wing.
9. 0" Min to 5'-0" Max. Estimated curb heights are shown elsewhere in the plans. For structures with pedestrian rail or curbs taller than 1'-0, refer to the Extended Curb Details (ECD) standard sheet. For structures with T631 or T631LS bridge rail, refer to the Mounting Details for T631 & T631LS Rails (T631-CM) standard sheet. Refer to the Box Culvert Rail Mounting Details (RAC) standard sheet for structures with bridge rail other than T631 or T631LS.
10. For vehicle safety, the following requirements must be met:
    - For structures without bridge rail, construct curbs no more than 3" above finished grade.
    - For structures with bridge rail, construct curbs flush with finished grade.

    Reduce curb heights, if necessary, to meet the above requirements. No changes will be made in quantities and no additional compensation will be allowed for this work.
11. 1'-0" typical. 2'-3" when the Box Culvert Rail Mounting Details (RAC) standard sheet is referred to elsewhere in the plans.
12. 3'-0" for Hw < 4'.
13. 6" for Hw < 4'.

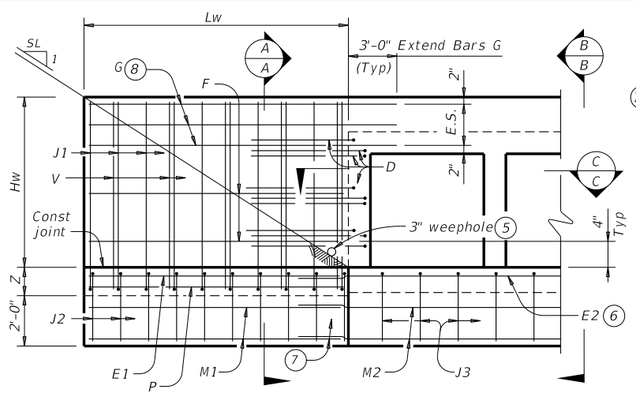

PARTIAL ELEVATION - PW-1

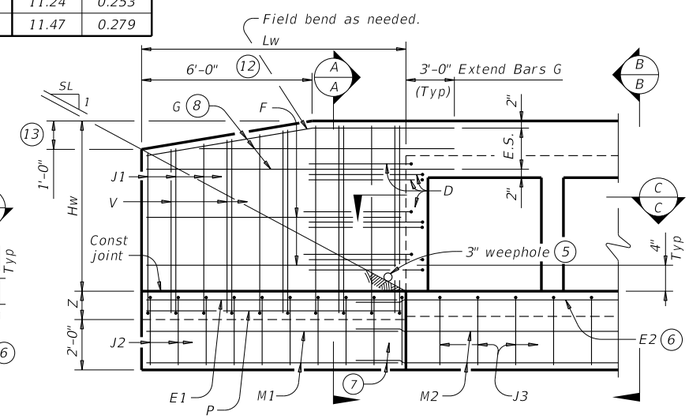

PARTIAL ELEVATION - PW-2

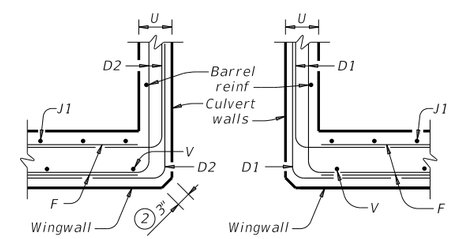

SECTION C-C - PW-1

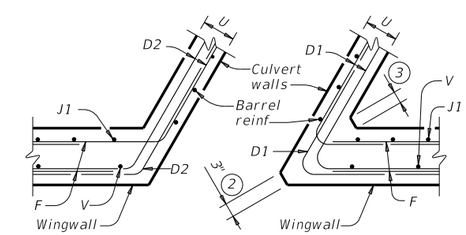

SECTION C-C - PW-2

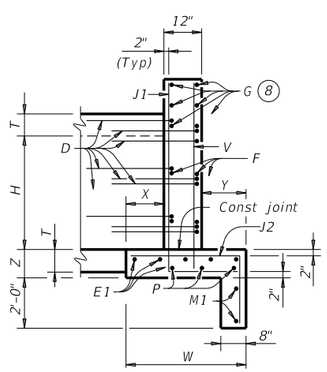

SECTION A-A
(Showing wing reinforcement.)

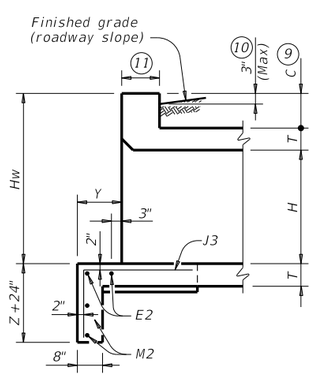

SECTION B-B
(Showing wing reinforcement.)

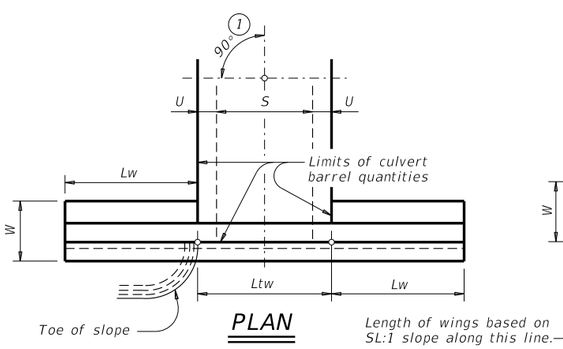

PLAN

DETAILS FOR NON-SKEWED BOX CULVERTS

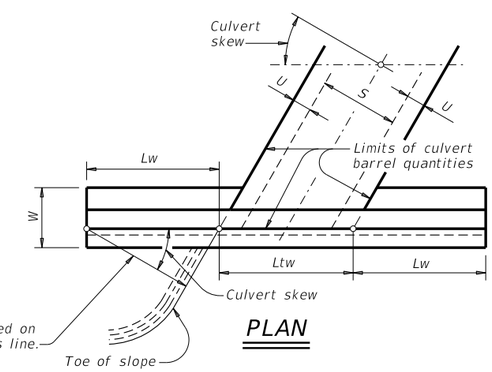

PLAN

DETAILS FOR SKEWED BOX CULVERTS
(Showing 30° skew.)

DESIGNER NOTES:

Type PW-1 can be used for all applications and must be used if railing is to be mounted to the wingwall.
Type PW-2 can only be used for applications without a railing mounted to the wingwall.

MATERIAL NOTES:

Provide Class C concrete (f'c=3,600 psi).
Provide Grade 60 reinforcing steel.
Provide galvanized reinforcing steel if required elsewhere in the plans.

GENERAL NOTES:

Designed in accordance with AASHTO LRFD Bridge Design Specifications.
Depth of toewalls for wingwalls and culverts may be reduced or eliminated when founded on solid rock, when directed by the Engineer.
See Box Culvert Supplement (BCS) standard sheet for wingwall type and additional dimensions and information.
Quantities for concrete and reinforcing steel resulting from the formulas given on this sheet are for the Contractor's information only.

Cover dimensions are clear dimensions, unless noted otherwise. Reinforcing dimensions are out-to-out of bars.

Texas Department of Transportation — Bridge Division Standard

CONCRETE WINGWALLS
WITH PARALLEL WINGS FOR BOX CULVERTS
TYPES PW-1 AND PW-2

PW

FILE: CD-PW-20.dgn	DN: GAF	CK: CAT	DW: TxDOT	CK: TxDOT
©TxDOT February 2020	CONT	SECT	JOB	HIGHWAY
REVISIONS				
	DIST		COUNTY	SHEET NO.
				26

DATE:
FILE:

DISCLAIMER:
The use of this standard is governed by the "Texas Engineering Practice Act". No warranty of any kind is made by TxDOT for any purpose whatsoever. TxDOT assumes no responsibility for the conversion of this standard to other formats or for incorrect results or damages resulting from its use.

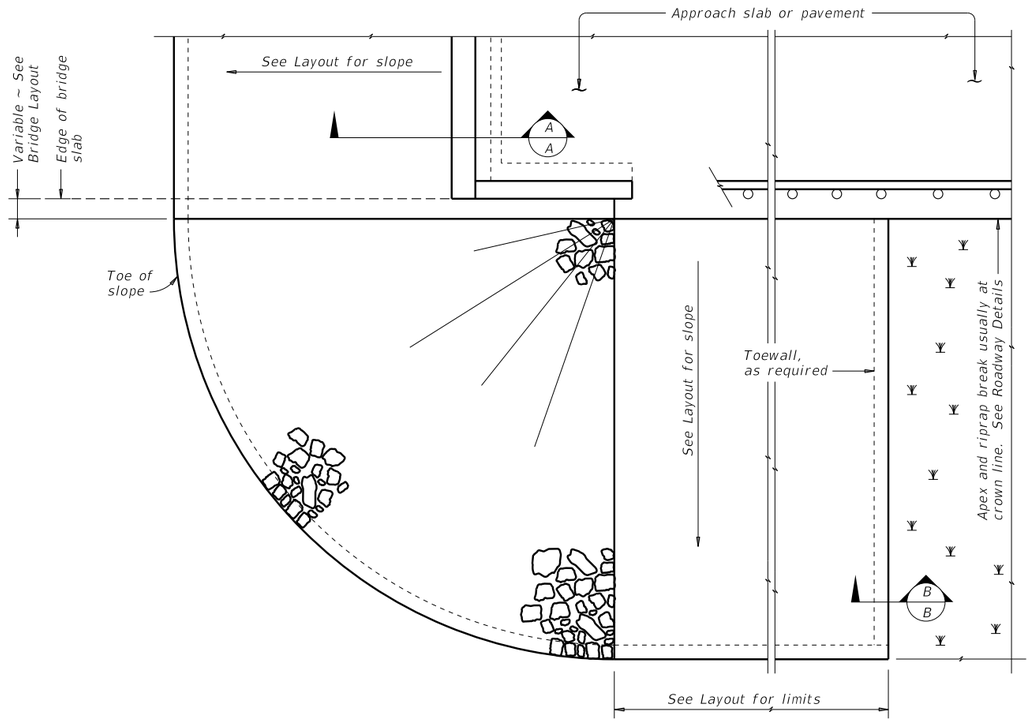

PLAN

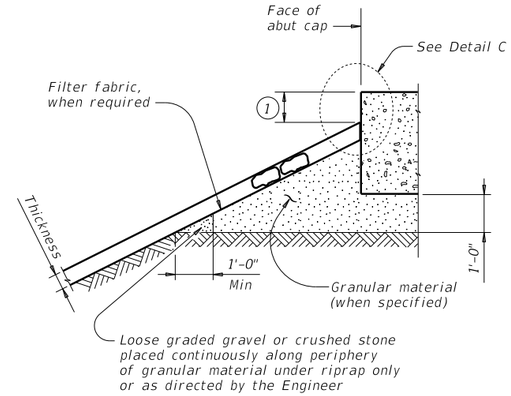

SECTION A-A AT CAP

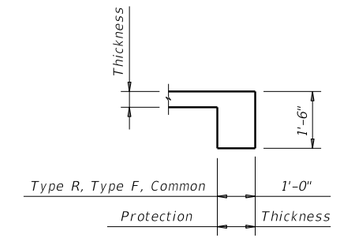

SECTION B-B

Provide toewall when shoulder drain is located adjacent to limits of stone riprap. Omit toewall when thickness of protection riprap is greater than 18".

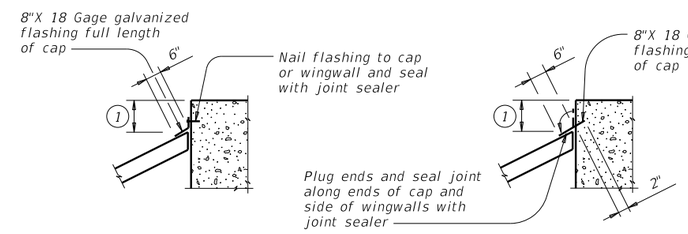

CAP OPTION A

CAP OPTION B

DETAIL C

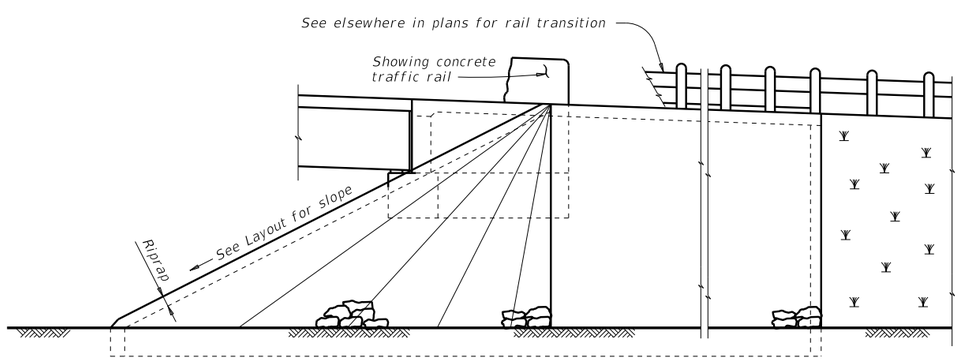

ELEVATION

(1) Top of cap to top of riprap dimension varies as directed by the Engineer. Provide 9" Min for beam/slab type bridges and 1'-6" for slab span, box beam, or slab beam bridges.

GENERAL NOTES:

Refer to Item 432, "Riprap" for stone size and gradation, and construction details. See Layout for limits and thickness of riprap specified.

See elsewhere in plans for locations and details of shoulder drains.

Texas Department of Transportation

Bridge Division Standard

STONE RIPRAP

SRR

FILE: MS-SRR-19.dgn	DN: AES	CK: JGD	DW: BWH	CK: AES
©TxDOT April 2019	CONT	SECT	JOB	HIGHWAY
REVISIONS				
	DIST	COUNTY		SHEET NO.
				27

DATE:
FILE:

DISCLAIMER:
The use of this standard is governed by the "Texas Engineering Practice Act". No warranty of any kind is made by TxDOT for any purpose whatsoever.
TxDOT assumes no responsibility for the conversion of this standard to other formats or for incorrect results or damages resulting from its use.

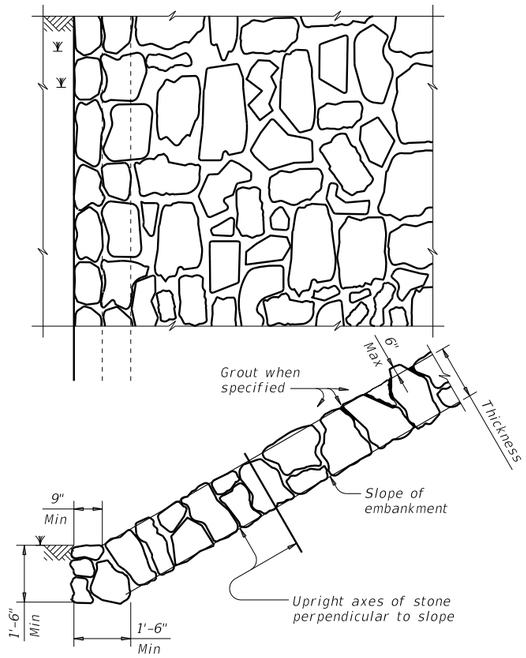

FIGURE 1 ~ TYPE R STONE RIPRAP

dry or grouted

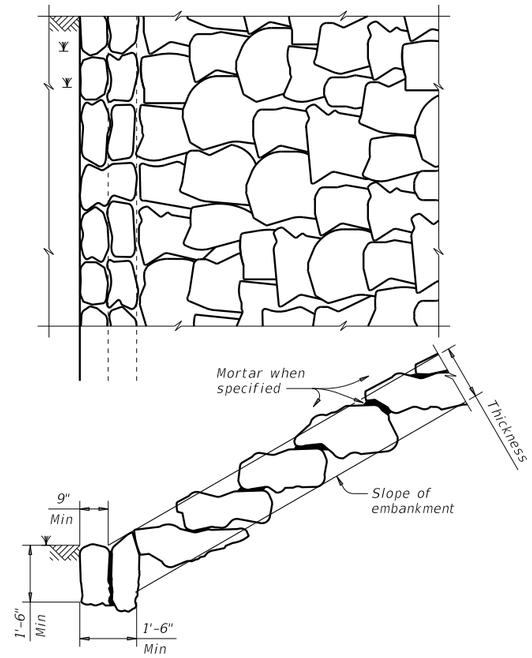

FIGURE 2 ~ TYPE F STONE RIPRAP

dry or mortared

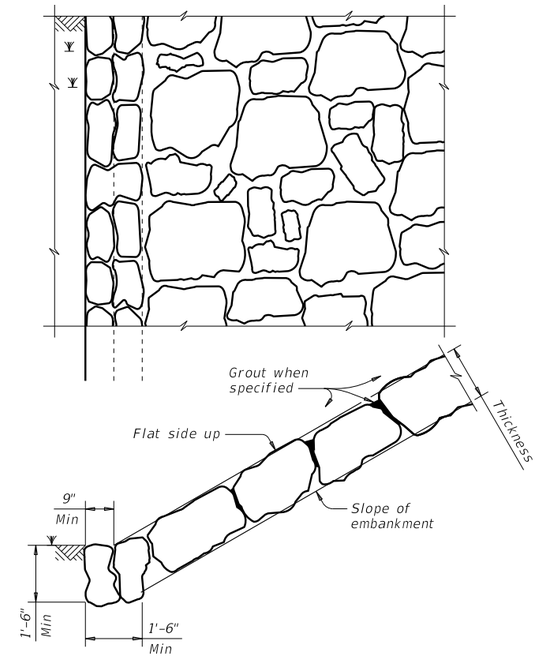

FIGURE 3 ~ TYPE F STONE RIPRAP

grouted

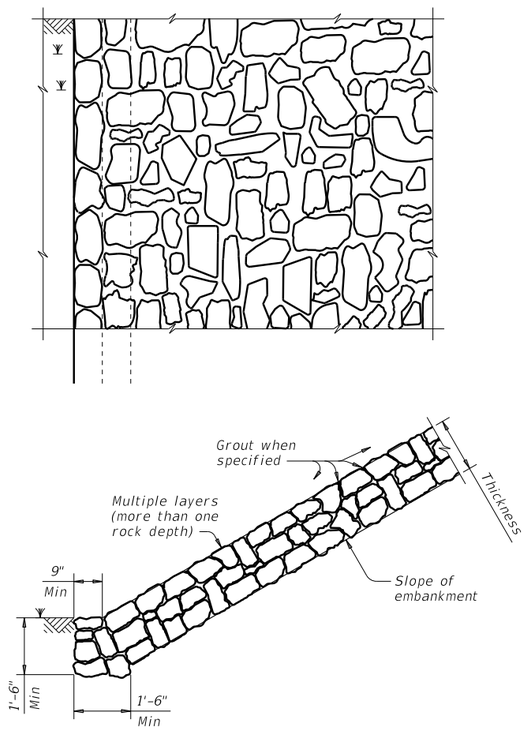

FIGURE 4 ~ COMMON STONE RIPRAP

dry or grouted

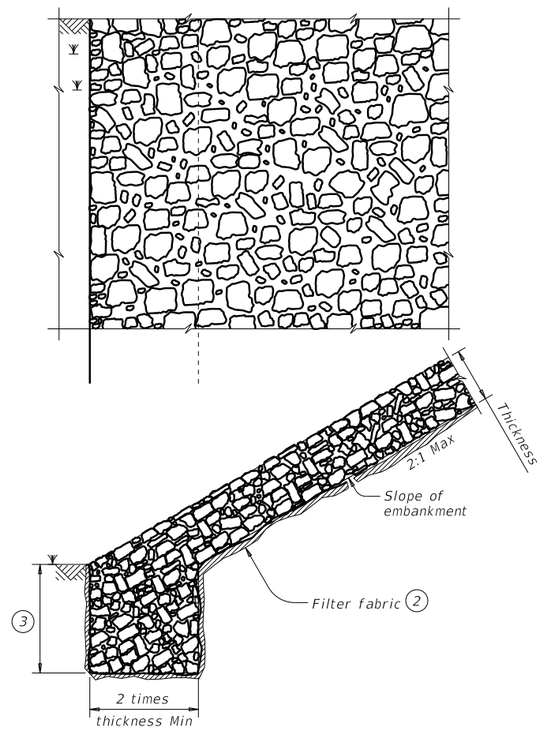

FIGURE 5 ~ PROTECTION STONE RIPRAP 5

2 Provide bedding material instead of filter fabric if shown elsewhere in plans. See Layout for thickness of bedding material.

3 Minimum toe depth is the larger of the maximum scour depth or 2 times the riprap thickness.

4 "Y" and Height need to be defined. See layout or detail sheet for values if this option is used.

5 List Stone Protection as size (XX inch) and thickness (YY inch) on the layout.
Example: Riprap (Stone Protection) XX inch, Thickness = YY inch.

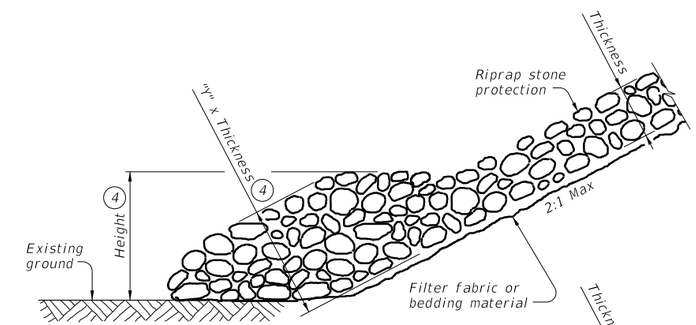

MOUNDED TOE

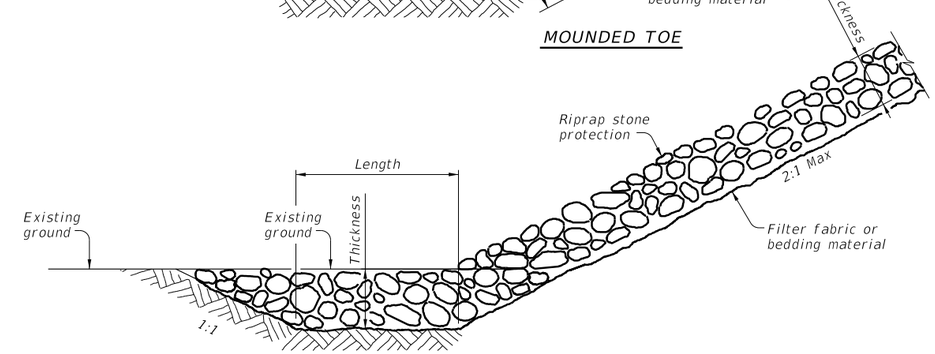

EXTENDED ROCK FILLED TRENCH

PROTECTION STONE RIPRAP TOE OPTIONS 5

SHEET 2 OF 2

Texas Department of Transportation

Bridge Division Standard

STONE RIPRAP

SRR

FILE: MS-SRR-19.dgn	DN: AES	CK: JGD	DW: BWH	CK: AES
©TxDOT April 2019	CONT	SECT	JOB	HIGHWAY
REVISIONS				
	DIST	COUNTY		SHEET NO.
				28

DATE:
FILE:

Appendix B – Bid Verification

Submittal Checklist: (To determine validity of Bid - any Bids received without the following items will be considered non-responsive and will be rejected. Forms from previous solicitations for goods or services will not be used in place of the required forms for this RFB)

_____Bid Bond (5% of the proposed bid price).

_____Appendix A (Pages 9 through 38) must be included in the Bid submittal.

_____Appendix B (Pages 39 through 52) must be completed, signed and included in the Bid submittal.

_____Appendix C - Conflict of Interest Form (CIQ Form) (Page 53) must be completed, signed and included in the Bid submittal.

_____Appendix D – Statement of Bidder's Qualification (Page 55) must be completed, signed and included in the Bid submittal.

_____Appendix F - HB 89 Verification Form (Page 62) must be completed, signed and included in the Bid submittal.

_____Appendix K – Contractor's Local Opportunity Plan (Page 85) must be completed, signed and included in the Bid submittal.

_____Appendix L – Non-collusion Affidavit of Prime Bidder (Page 87) must be completed, signed and included in the Bid submittal.

_____Appendix M – Contractor's Certification – Civil Rights (Page 88) must be completed, signed and included in the Bid submittal.

_____Appendix N – Nondiscrimination on the Basis of Disability (Page 89) must be completed, signed and included in the Bid submittal.

_____Appendix O - Byrd Anti-Lobbying Amendment (Page 90) must be completed, signed and included in the Bid submittal.

_____Proof of Consulting Firm's Ability to Meet the Insurance Requirements (Page 51).

_____Signed Addendum(s) (If any are issued by Owner).

All Bids submitted to Bastrop County shall include this page with the submitted Bid.		
RFB Number:	**RFB 25BCP08B**	
Project Title:	**Hall Road Drainage Improvement Project - DR-4232-0072**	
Submittal Deadline:	**2:00 P.M. (CST), October 16, 2025** (Mandatory Pre-Bid Meeting - October 10 @ 10AM)	
Submit hard-copies to:	**MAIL:** Bastrop County Purchasing Department: Attn: Leon Scaife 1041 Lovers Lane Bastrop Texas, 78602	**HAND DELIVER:** Bastrop County Purchasing Department: Attn: Leon Scaife 1041 Lovers Lane Bastrop Texas, 78602

Bidders Information:			
Bidder's Legal Name:			
Address:			
County, State & Zip			
Federal Employers Identification Number #			
Bidder's Point of Contact:			
Phone Number:		**Fax Number:**	
E-Mail Address:			

Bidders Authorization

I, the undersigned, have the authority to execute this Bid in its entirety as submitted and enter into a contract on behalf of the Bidders.

Printed Name and Position of Authorized Representative:_____

Signature of Authorized Representative:_____

Signed this _____ _(day) of _____ (month), _____(year)

Appendix B – Bid (continued)

I. *CONTRACT AWARD INFORMATION:*

A. Term of Contract

Any contract resulting from this RFB shall be effective from the date that the Notice to Proceed is received by the CONTRACTOR and shall remain in effect until satisfactory completion of all tasks listed in this request for bids. Number of Days provided by the Contractor on the attached bid sheet will be listed as the time frame for the contract term.

B. Federal, State and/or Local Identification Information

1) Centralized Master Bidder List registration number:_____

2) Prime CONTRACTORHUB / MWBE registration number:_____

3) Employer Identification Number (EIN)/Federal Tax Identification Number:_____

4) An individual Bidders acting as a sole proprietor must also enter the Bidder's Social Security Number:

#_____-_____-_____.

II. *CONTRACT TERMS AND CONDITIONS. EXCEPT WHERE BIDDERS MAKES SPECIFIC EXCEPTION IN THE SUBMITTED BID, ANY CONTRACT RESULTING FROM THIS RFB WILL CONTAIN THE FOLLOWING TERMS AND CONDITIONS, WHICH BIDDERS HEREBY ACKNOWLEDGES, AND TO WHICH BIDDERS AGREES BY SUBMITTING A BID*:

1. **Standard Terms and Conditions**

A. Taxpayer Identification: Bidder must provide the County with a current W-9 before any goods or services can be procured from the Bidders.

B. Governing Law and Venue: All Bid submitted in response to this solicitation and any resulting contract shall be governed by and construed in accordance with the laws and court decisions of the State of Texas. Any legal or equitable actions arising from this request for Bid, or any resulting contract shall be brought before an appropriate court located in the Bastrop County.

C. Resolution of Program Non-compliance and Disallowed Costs: In the event of any dispute, claim, question, or disagreement arising from or relating to this agreement, or the breach thereof, including determination of responsibility for any costs disallowed as a result of non-compliance with federal or state program requirements, the parties hereto shall use their best efforts to settle the dispute, claim, question or disagreement. To this effect, the parties shall consult and negotiate with each other in good faith within 30 days of receipt of a written notice of the dispute or invitation to negotiate and attempt to reach a just and equitable solution satisfactory to both parties. If the matter is not resolved by negotiation within 30 days of receipt of written notice or invitation to negotiate, the parties agree first to try in good faith to settle the matter by mediation administered by the American Arbitration Association under its Commercial Mediation Procedures before resorting to arbitration, litigation, or some other dispute resolution procedure. The parties may enter into a written amendment to this Agreement and choose a mediator that is not affiliated with the American Arbitration Association. The parties shall bear the costs of such mediation equally. [This section may also provide for the qualifications of the mediator(s), the locale of meetings, time limits or any other item of concern to the parties. If the matter is not resolved through such mediation within 60 days of the initiation of that procedure, either party may proceed to file suit.

D. Termination for Cause: The occurrence of any one or more of the following events will justify termination of the contract by the County for cause:

i. The successful Bidders fails to perform in accordance with the provisions of these specifications; or

ii. The successful Bidders violates any of the provisions of these specifications; or

iii. The successful Bidders disregards laws or regulations of any public body having jurisdiction; or

iv. The successful Bidders transfers, assigns, or conveys any or all of its obligations or duties under the contract to another without written consent of the County.

v. If one or more of the events identified in Subparagraphs I (i) through (iv) occurs, the County may, terminate the contract by giving the successful Bidders seven (7) Calendar days written notice. In such case, the successful Bidders shall only be entitled to receive payment for goods and services provided before the effective date of termination. The successful Bidders shall not receive any payment on account of loss of anticipated profits or revenue or other economic loss resulting from such termination.

vi. When the contract has been so terminated by the County, such termination shall not affect any rights or remedies of the County then existing, or which may thereafter accrue.

A "Termination for Cause" clause will be added to selected Bidder's contract with Bastrop County.

E. Termination for Convenience: This contract may be cancelled or terminated at any time by giving vendor thirty (30) days written notice. Vendor may be entitled to payment for services actually performed; to the extent said services are satisfactory.

A "Termination for Convenience" clause will be added to selected Bidder's contract with Bastrop County.

F. Force Majeure: To the extent that either party to this Contract shall be wholly or partially prevented from the performance within the term specified of any obligation or duty placed on such party by reason of or through strikes, stoppage of labor, riot, fire, flood, acts of war, insurrection, accident, order of any court, act of God, or specific cause reasonably beyond the party's control and not attributable to its neglect or nonfeasance, in such event, the time for the performance of such obligation or duty shall be suspended until such disability to perform is removed. Determination of force majeure shall rest solely with Bastrop County.

G. Prohibition on certain telecommunications and video surveillance services or equipment:

a. Recipients and sub recipients are prohibited from obligating or expending loan or grant funds to:

1. Procure or obtain;
2. Extend or renew a contract to procure or obtain; or
3. Enter into a contract (or extend or renew a contract) to procure or obtain equipment, services, or systems that uses covered telecommunications equipment or services as a substantial or essential component of any system, or as critical technology as part of any system. As described in Public Law 115-232, section 889, covered telecommunications equipment is telecommunications equipment produced by Huawei Technologies Company or ZTE Corporation (or any subsidiary or affiliate of such entities).

1. For the purpose of public safety, security of government facilities, physical security surveillance of critical infrastructure, and other national security purposes, video surveillance and telecommunications equipment produced by Hytera Communications Corporation, Hangzhou Hikvision Digital Technology Company, or Dahua Technology Company (or any subsidiary or affiliate of such entities).
2. Telecommunications or video surveillance services provided by such entities or using such equipment.
3. Telecommunications or video surveillance equipment or services produced or provided by an entity that the Secretary of Defense, in consultation with the Director of the National Intelligence or the

Director of the Federal Bureau of Investigation, reasonably believes to be an entity owned or controlled by, or otherwise connected to, the government of a covered foreign country.

b. In implementing the prohibition under Public Law 115-232, section 889, subsection (f), paragraph (1), heads of executive agencies administering loan, grant, or subsidy programs shall prioritize available funding and technical support to assist affected businesses, institutions and organizations as is reasonably necessary for those affected entities to transition from covered communications equipment and services, to procure replacement equipment and services, and to ensure that communications service to users and customers is sustained.

c. See Public Law 115-232, section 889 for additional information.

d. See also § 200.471.

H. Domestic preferences for procurements:

a. As appropriate and to the extent consistent with law, the non-Federal entity should, to the greatest extent practicable under a Federal award, provide a preference for the purchase, acquisition, or use of goods, products, or materials produced in the United States (including but not limited to iron, aluminum, steel, cement, and other manufactured products). The requirements of this section must be included in all subawards including all contracts and purchase orders for work or products under this award.

b. For purposes of this section:

1. "Produced in the United States" means, for iron and steel products, that all manufacturing processes, from the initial melting stage through the application of coatings, occurred in the United States.
2. "Manufactured products" means items and construction materials composed in whole or in part of non-ferrous metals such as aluminum; plastics and polymer-based products such as polyvinyl chloride pipe; aggregates such as concrete; glass, including optical fiber; and lumber.

c. Federal agencies providing Federal financial assistance for infrastructure projects must implement the Buy America preferences set forth in 2 CFR part 184. [85 FR 49543, Aug. 13, 2020, as amended at 88 FR 57790, Aug. 23, 2023]

I. Procurement of recovered materials:

A non-Federal entity that is a state agency or agency of a political subdivision of a state and its contractors must comply with section 6002 of the Solid Waste Disposal Act, as amended by the Resource Conservation and Recovery Act. The requirements of Section 6002 include procuring only items designated in guidelines of the Environmental Protection Agency (EPA) at 40 CFR part 247 that contain the highest percentage of recovered materials practicable, consistent with maintaining a satisfactory level of competition, where the purchase price of the item exceeds $10,000 or the value of the quantity acquired during the preceding fiscal year exceeded $10,000; procuring solid waste management services in a manner that maximizes energy and resource recovery; and establishing an affirmative procurement program for procurement of recovered materials identified in the EPA guidelines.

J. Debarment and Suspension (Executive Orders 12549 and 12689):

A contract award (see 2 CFR 180.220) must not be made to parties listed on the governmentwide exclusions in the System for Award Management (SAM), in accordance with the OMB guidelines at 2 CFR 180 that implement Executive Orders 12549 (3 CFR part 1986 Comp., p. 189) and 12689 (3 CFR part 1989 Comp., p. 235), "Debarment and Suspension." SAM Exclusions contains the names of parties debarred, suspended, or otherwise excluded by agencies, as well as parties declared ineligible under statutory or regulatory authority other than Executive Order 12549.

K. Clean Air Act (42 U.S.C. 7401-7671q.) and the Federal Water Pollution Control Act (33 U.S.C. 1251-1387):

As amended—Contracts and subgrants of amounts in excess of $150,000 must contain a provision that requires the non-Federal award to agree to comply with all applicable standards, orders or regulations issued pursuant to the Clean Air Act (42 U.S.C. 7401-7671q) and the Federal Water Pollution Control Act as amended (33 U.S.C. 1251-1387). Violations must be reported to the Federal awarding agency and the Regional Office of the Environmental Protection Agency (EPA).

L. Rights to Inventions Made Under a Contract or Agreement: If the Federal award meets the definition of "funding agreement" under 37 CFR § 401.2 (a) and the recipient or subrecipient wishes to enter into a contract with a small business firm or nonprofit organization regarding the substitution of parties, assignment or performance of experimental, developmental, or research work under that "funding agreement," the recipient or subrecipient must comply with the requirements of 37 CFR Part 401, "Rights to Inventions Made by Nonprofit Organizations and Small Business Firms Under Government Grants, Contracts and Cooperative Agreements," and any implementing regulations issued by the awarding agency.

M. Contract Work Hours and Safety Standards Act (40 U.S.C. 3701-3708): Where applicable , all contracts awarded by the non-Federal entity in excess of $100,000 that involve the employment of mechanics or laborers must include a provision for compliance with 40 U.S.C. 3702 and 3704, as supplemented by Department of Labor regulations (29 CFR Part 5) . Under 40 U.S.C. 3702 of the Act, each contractor must be required to compute the wages of every mechanic and laborer on the basis of a standard workweek of 40 hours. Work in excess of the standard work week is permissible provided that the worker is compensated at a rate of not less than one and a half times the basic rate of pay for all hours worked in excess of 40 hours in the work week. The requirements of 40 U.S.C. 3704 are applicable to construction work and provide that no laborer or mechanic must be required to work in surroundings or under working conditions which are unsanitary, hazardous or dangerous. These requirements do not apply to the purchases of supplies or materials or articles ordinarily available on the open market, or contracts for transportation or transmission of intelligence.

N. Compliance with the Davis-Bacon Act (40 U.S.C. 3141-3144 and 3146-3148):
The Davis-Bacon Act requires payment of prevailing wages (APPENDIX I - Current Prevailing Wage Rates by the Department of Labor) on federally funded or assisted construction projects. The Davis-Bacon Act applies to each federal government or District of Columbia contract in excess of $2,000 for the construction, alteration, or repair (including painting and decorating) of public buildings or public works. Many federal laws that authorize federal assistance for construction through grants, loans, loan guarantees, and insurance are Davis-Bacon "related Acts." The Davis-Bacon labor standards clauses required for covered contracts are:

1. *Minimum wages.*

(i) All laborers and mechanics employed or working upon the site of the work (or under the United States Housing Act of 1937 or under the Housing Act of 1949 in the construction or development of the project), will be paid unconditionally and not less often than once a week, and without subsequent deduction or rebate on any account (except such payroll deductions as are permitted by regulations issued by the Secretary of Labor under the Copeland Act (29 CFR part 3)), the full amount of wages and bona fide fringe benefits (or cash equivalents thereof) due at time of payment computed at rates not less than those contained in the wage determination of the Secretary of Labor which is attached hereto and made a part hereof, regardless of any contractual relationship which may be alleged to exist between the contractor and such laborers and mechanics. Contributions made or costs reasonably anticipated for bona fide fringe benefits under section 1(b)(2) of the Davis-Bacon Act on behalf of laborers or mechanics are considered wages paid to such laborers or mechanics, subject to the provisions of paragraph (a)(1)(iv) of this section; also, regular contributions made or costs incurred for more than a weekly period (but not less often than quarterly) under plans, funds, or programs which cover the particular weekly period, are deemed to be constructively made or incurred during such weekly period. Such laborers and mechanics shall be paid the appropriate wage rate and fringe benefits on the wage determination for the classification of work actually performed, without regard to skill, except as provided in §5.5(a)(4). Laborers or mechanics performing work in more than one classification may be compensated at the rate specified for each classification for the time actually worked therein: *Provided,* that the employer's payroll records accurately set forth the time spent in each classification in which work is performed. The wage determination (including any additional classification and wage rates conformed under paragraph (a)(1)(ii) of this section) and the Davis-Bacon poster (WH-1321) shall be posted at all times by the contractor and its subcontractors at the site of the work in a prominent and accessible place where it can be easily seen by the workers.

(ii)(A) The contracting officer shall require that any class of laborers or mechanics, including helpers, which is not listed in the wage determination and which is to be employed under the contract shall be classified in conformance with the wage determination. The contracting officer shall approve an additional classification and wage rate and fringe benefits therefore only when the following criteria have been met:

(*1*) The work to be performed by the classification requested is not performed by a classification in the wage determination; and

(*2*) The classification is utilized in the area by the construction industry; and

(*3*) The proposed wage rate, including any bona fide fringe benefits, bears a reasonable relationship to the wage rates contained in the wage determination.

(B) If the contractor and the laborers and mechanics to be employed in the classification (if known), or their representatives, and the contracting officer agree on the classification and wage rate (including the amount designated for fringe benefits where appropriate), a report of the action taken shall be sent by the contracting officer to the Administrator of the Wage and Hour Division, U.S. Department of Labor, Washington, DC 20210. The Administrator, or an authorized representative, will approve, modify, or disapprove every additional classification action within 30 days of receipt and so advise the contracting officer or will notify the contracting officer within the 30-day period that additional time is necessary.

(C) In the event the contractor, the laborers or mechanics to be employed in the classification or their representatives, and the contracting officer do not agree on the proposed classification and wage rate (including the amount designated for fringe benefits, where appropriate), the contracting officer shall refer the questions, including the views of all interested parties and the recommendation of the contracting officer, to the Administrator for determination. The Administrator, or an authorized representative, will issue a determination within 30 days of receipt and so advise the contracting officer or will notify the contracting officer within the 30-day period that additional time is necessary.

(D) The wage rate (including fringe benefits where appropriate) determined pursuant to paragraphs (a)(1)(ii)(B) or (C) of this section, shall be paid to all workers performing work in the classification under this contract from the first day on which work is performed in the classification.

(iii) Whenever the minimum wage rate prescribed in the contract for a class of laborers or mechanics includes a fringe benefit which is not expressed as an hourly rate, the contractor shall either pay the benefit as stated in the wage determination or shall pay another bona fide fringe benefit or an hourly cash equivalent thereof.

(iv) If the contractor does not make payments to a trustee or other third person, the contractor may consider as part of the wages of any laborer or mechanic the amount of any costs reasonably anticipated in providing bona fide fringe benefits under a plan or program, *Provided,* That the Secretary of Labor has found, upon the written request of the contractor, that the applicable standards of the Davis-Bacon Act have been met. The Secretary of Labor may require the contractor to set aside in a separate account assets for the meeting of obligations under the plan or program.

2. *Withholding.*

The (write in name of Federal Agency or the loan or grant recipient) shall upon its own action or upon written request of an authorized representative of the Department of Labor withhold or cause to be withheld from the contractor under this contract or any other Federal contract with the same prime contractor, or any other federally-assisted contract subject to Davis-Bacon prevailing wage requirements, which is held by the same prime contractor, so much of the accrued payments or advances as may be considered necessary to pay laborers and mechanics, including apprentices, trainees, and helpers, employed by the contractor or any subcontractor the full amount of wages required by the contract. In the event of failure to pay any laborer or mechanic, including any apprentice, trainee, or helper, employed or working on the site of the work (or under the United States Housing Act of 1937 or under the Housing Act of 1949 in the construction or development of the project), all or part of the wages required by the contract, the (Agency) may, after written notice to the contractor, sponsor, applicant, or owner, take such action as may be necessary to cause the suspension of any further payment, advance, or guarantee of funds until such violations have ceased.

3. *Payrolls and basic records.*

(i) Payrolls and basic records relating thereto shall be maintained by the contractor during the course of the work and preserved for a period of three years thereafter for all laborers and mechanics working at the site of the work (or under the United States Housing Act of 1937, or under the Housing Act of 1949, in the construction or development of the project). Such records shall contain the name, address, and social security number of each such worker, his or her correct classification, hourly rates of wages paid (including rates of contributions or costs anticipated for bona fide fringe benefits or cash equivalents thereof of the types described in section 1(b)(2)(B) of the Davis-Bacon Act), daily and weekly number of hours worked, deductions made and actual wages paid. Whenever the Secretary of Labor has found under 29 CFR 5.5(a)(1)(iv) that the wages of any laborer or mechanic include the amount of any costs reasonably anticipated in providing benefits under a plan or program described in section 1(b)(2)(B) of the Davis-Bacon Act, the contractor shall maintain records which show that the commitment to provide such benefits is enforceable, that the plan or program is financially responsible, and that the plan or program has been communicated in writing to the laborers or mechanics affected, and records which show the costs anticipated or the actual cost incurred in providing such benefits. Contractors employing apprentices or trainees under approved programs shall maintain written evidence of the registration of apprenticeship programs and certification of trainee programs, the registration of the apprentices and trainees, and the ratios and wage rates prescribed in the applicable programs.

(ii)(A) The contractor shall submit weekly for each week in which any contract work is performed a copy of all payrolls to the (write in name of appropriate federal agency) if the agency is a party to the contract, but if the agency is not such a party, the contractor will submit the payrolls to the applicant, sponsor, or owner, as the case may be, for transmission to the (write in name of agency). The payrolls submitted shall set out accurately and completely all of the information required to be maintained under 29 CFR 5.5(a)(3)(i), except that full social security numbers and home addresses shall not be included on weekly transmittals. Instead, the payrolls shall only need to include an individually identifying number for each employee (*e.g.*, the last four digits of the employee's social security number). The required weekly payroll information may be submitted in any form desired. Optional Form WH-347 is available for this purpose from the Wage and Hour Division Web site at *http://www.dol.gov/esa/whd/forms/wh347instr.htm* or its successor site. The prime contractor is responsible for the submission of copies of payrolls by all subcontractors. Contractors and subcontractors shall maintain the full social security number and current address of each covered worker, and shall provide them upon request to the (write in name of appropriate federal agency) if the agency is a party to the contract, but if the agency is not such a party, the contractor will submit them to the applicant, sponsor, or owner, as the case may be, for transmission to the (write in name of agency), the contractor, or the Wage and Hour Division of the Department of Labor for purposes of an investigation or audit of compliance with prevailing wage requirements. It is not a violation of this section for a prime contractor to require a subcontractor to provide addresses and social security numbers to the prime contractor for its own records, without weekly submission to the sponsoring government agency (or the applicant, sponsor, or owner).

(B) Each payroll submitted shall be accompanied by a "Statement of Compliance," signed by the contractor or subcontractor or his or her agent who pays or supervises the payment of the persons employed under the contract and shall certify the following:

(*1*) That the payroll for the payroll period contains the information required to be provided under §5.5 (a)(3)(ii) of Regulations, 29 CFR part 5, the appropriate information is being maintained under §5.5 (a)(3)(i) of Regulations, 29 CFR part 5, and that such information is correct and complete;

(*2*) That each laborer or mechanic (including each helper, apprentice, and trainee) employed on the contract during the payroll period has been paid the full weekly wages earned, without rebate, either directly or indirectly, and that no deductions have been made either directly or indirectly from the full wages earned, other than permissible deductions as set forth in Regulations, 29 CFR part 3;

(*3*) That each laborer or mechanic has been paid not less than the applicable wage rates and fringe benefits or cash equivalents for the classification of work performed, as specified in the applicable wage determination incorporated into the contract.

(C) The weekly submission of a properly executed certification set forth on the reverse side of Optional Form WH-347 shall satisfy the requirement for submission of the "Statement of Compliance" required by paragraph (a)(3)(ii)(B) of this section.

(D) The falsification of any of the above certifications may subject the contractor or subcontractor to civil or criminal prosecution under section 1001 of title 18 and section 231 of title 31 of the United States Code.

(iii) The contractor or subcontractor shall make the records required under paragraph (a)(3)(i) of this section available for inspection, copying, or transcription by authorized representatives of the (write the name of the agency) or the Department of Labor, and shall permit such representatives to interview employees during working hours on the job. If the contractor or subcontractor fails to submit the required records or to make them available, the Federal agency may, after written notice to the contractor, sponsor, applicant, or owner, take such action as may be necessary to cause the suspension of any further payment, advance, or guarantee of funds. Furthermore, failure to submit the required records upon request or to make such records available may be grounds for debarment action pursuant to 29 CFR 5.12.

4. *Apprentices and trainees*

(i) *Apprentices.* Apprentices will be permitted to work at less than the predetermined rate for the work they performed when they are employed pursuant to and individually registered in a bona fide apprenticeship program registered with the U.S. Department of Labor, Employment and Training Administration, Office of Apprenticeship Training, Employer and Labor Services, or with a State Apprenticeship Agency recognized by the Office, or if a person is employed in his or her first 90 days of probationary employment as an apprentice in such an apprenticeship program, who is not individually registered in the program, but who has been certified by the Office of Apprenticeship Training, Employer and Labor Services or a State Apprenticeship Agency (where appropriate) to be eligible for probationary employment as an apprentice. The allowable ratio of apprentices to journeymen on the job site in any craft classification shall not be greater than the ratio permitted to the contractor as to the entire work force under the registered program. Any worker listed on a payroll at an apprentice wage rate, who is not registered or otherwise employed as stated above, shall be paid not less than the applicable wage rate on the wage determination for the classification of work actually performed. In addition, any apprentice performing work on the job site in excess of the ratio permitted under the registered program shall be paid not less than the applicable wage rate on the wage determination for the work actually performed. Where a contractor is performing construction on a project in a locality other than that in which its program is registered, the ratios and wage rates (expressed in percentages of the journeyman's hourly rate) specified in the contractor's or subcontractor's registered program shall be observed. Every apprentice must be paid at not less than the rate specified in the registered program for the apprentice's level of progress, expressed as a percentage of the journeymen hourly rate specified in the applicable wage determination. Apprentices shall be paid fringe benefits in accordance with the provisions of the apprenticeship program. If the apprenticeship program does not specify fringe benefits, apprentices must be paid the full amount of fringe benefits listed on the wage determination for the applicable classification. If the Administrator determines that a different practice prevails for the applicable apprentice classification, fringes shall be paid in accordance with that determination. In the event the Office of Apprenticeship Training, Employer and Labor Services, or a State Apprenticeship Agency recognized by the Office, withdraws approval of an apprenticeship program, the contractor will no longer be permitted to utilize apprentices at less than the applicable predetermined rate for the work performed until an acceptable program is approved.

(ii) *Trainees.* Except as provided in 29 CFR 5.16, trainees will not be permitted to work at less than the predetermined rate for the work performed unless they are employed pursuant to and individually registered in a program which has received prior approval, evidenced by formal certification by the U.S. Department of Labor, Employment and Training Administration. The ratio of trainees to journeymen on the job site shall not be greater than permitted under the plan approved by the Employment and Training Administration. Every trainee must be paid at not less than the rate specified in the approved program for the trainee's level of progress, expressed as a percentage of the journeyman hourly rate specified in the applicable wage determination. Trainees shall be paid fringe benefits in accordance with the provisions of the trainee program. If the trainee program does not mention fringe benefits, trainees shall be paid the full amount of fringe benefits listed on the wage determination unless the Administrator of the Wage and Hour Division determines that there is an apprenticeship program associated with the corresponding journeyman wage rate on the wage determination which provides for less than full fringe benefits for apprentices. Any employee listed on the payroll at a trainee rate who is not registered and participating in a training plan approved by the Employment and Training Administration shall be paid not less than the applicable wage rate on the wage

determination for the classification of work actually performed. In addition, any trainee performing work on the job site in excess of the ratio permitted under the registered program shall be paid not less than the applicable wage rate on the wage determination for the work actually performed. In the event the Employment and Training Administration withdraws approval of a training program, the contractor will no longer be permitted to utilize trainees at less than the applicable predetermined rate for the work performed until an acceptable program is approved.

(iii) *Equal employment opportunity.* The utilization of apprentices, trainees and journeymen under this part shall be in conformity with the equal employment opportunity requirements of Executive Order 11246, as amended, and 29 CFR part 30.

5. *Compliance with Copeland Act requirements.*

The contractor shall comply with the requirements of 29 CFR part 3, which are incorporated by reference in this contract.

6. *Subcontracts.*

The contractor or subcontractor shall insert in any subcontracts the clauses contained in 29 CFR 5.5(a)(1) through (10) and such other clauses as the **END USER** may by appropriate instructions require, and also a clause requiring the subcontractors to include these clauses in any lower tier subcontracts. The prime contractor shall be responsible for the compliance by any subcontractor or lower tier subcontractor with all the contract clauses in 29 CFR 5.5.

7. *Contract termination: debarment.*

A breach of the contract clauses in 29 CFR 5.5 may be grounds for termination of the contract, and for debarment as a contractor and a subcontractor as provided in 29 CFR 5.12.

8. *Compliance with Davis-Bacon and Related Act requirements.*

All rulings and interpretations of the Davis-Bacon and Related Acts contained in 29 CFR parts 1, 3, and 5 are herein incorporated by reference in this contract.

9. *Disputes concerning labor standards.*

Disputes arising out of the labor standards provisions of this contract shall not be subject to the general disputes clause of this contract. Such disputes shall be resolved in accordance with the procedures of the Department of Labor set forth in 29 CFR parts 5, 6, and 7. Disputes within the meaning of this clause include disputes between the contractor (or any of its subcontractors) and the contracting agency, the U.S. Department of Labor, or the employees or their representatives.

10. *Certification of eligibility.*

(i) By entering into this contract, the contractor certifies that neither it (nor he or she) nor any person or firm who has an interest in the contractor's firm is a person or firm ineligible to be awarded Government contracts by virtue of section 3

(a) of the Davis-Bacon Act or 29 CFR 5.12(a)(1).

(ii) No part of this contract shall be subcontracted to any person or firm ineligible for award of a Government contract by virtue of section 3(a) of the Davis-Bacon Act or 29 CFR 5.12(a)(1).

(iii) The penalty for making false statements is prescribed in the U.S. Criminal Code, 18 U.S.C. 1001.

(b) *Contract Work Hours and Safety Standards Act.* The Agency Head shall cause or require the contracting officer to insert the following clauses set forth in paragraphs (b)(1), (2), (3), and (4) of this section in full in any contract in an amount in excess of $100,000 and subject to the overtime provisions of the Contract Work Hours and Safety Standards Act. These clauses shall be inserted in addition to the clauses required by §5.5(a) or §4.6 of part 4 of this title. As used in this paragraph, the terms *laborers* and *mechanics* include watchmen and guards.

(1) *Overtime requirements.* No contractor or subcontractor contracting for any part of the conract work which may require or involve the employment of laborers or mechanics shall require or permit any such laborer or mechanic in any workweek in which he or she is employed on such work to work in excess of forty hours in such workweek unless such laborer or mechanic receives compensation at a rate not less than one and one-half times the basic rate of pay for all hours worked in excess of forty hours in such workweek.

(2) *Violation; liability for unpaid wages; liquidated damages.* In the event of any violation of the clause set forth in paragraph (b)(1) of this section the contractor and any subcontractor responsible therefor shall be liable for the unpaid wages. In addition, such contractor and subcontractor shall be liable to the United States

(in the case of work done under contract for the District of Columbia or a territory, to such District or to such territory), for liquidated damages. Such liquidated damages shall be computed with respect to each individual laborer or mechanic, including watchmen and guards, employed in violation of the clause set forth in paragraph (b)(1) of this section, in the sum of $25 for each calendar day on which such individual was required or permitted to work in excess of the standard workweek of forty hours without payment of the overtime wages required by the clause set forth in paragraph (b)(1) of this section.

(3) *Withholding for unpaid wages and liquidated damages.* The **END USER** shall upon its own action or upon written request of an authorized representative of the Department of Labor withhold or cause to be withheld, from any moneys payable on account of work performed by the contractor or subcontractor under any such contract or any other Federal contract with the same prime contractor, or any other federally-assisted contract subject to the Contract Work Hours and Safety Standards Act, which is held by the same prime contractor, such sums as may be determined to be necessary to satisfy any liabilities of such contractor or subcontractor for unpaid wages and liquidated damages as provided in the clause set forth in paragraph (b)(2) of this section.

(4) *Subcontracts.* The contractor or subcontractor shall insert in any subcontracts the clauses set forth in paragraph (b)(1) through (4) of this section and also a clause requiring the subcontractors to include these clauses in any lower tier subcontracts. The prime contractor shall be responsible for compliance by any subcontractor or lower tier subcontractor with the clauses set forth in paragraphs (b)(1) through (4) of this section.

(c) In addition to the clauses contained in paragraph (b), in any contract subject only to the Contract Work Hours and Safety Standards Act and not to any of the other statutes cited in §5.1, the Agency Head shall cause or require the contracting officer to insert a clause requiring that the contractor or subcontractor shall maintain payrolls and basic payroll records during the course of the work and shall preserve them for a period of three years from the completion of the contract for all laborers and mechanics, including guards and watchmen, working on the contract. Such records shall contain the name and address of each such employee, social security number, correct classifications, hourly rates of wages paid, daily and weekly number of hours worked, deductions made, and actual wages paid. Further, the Agency Head shall cause or require the contracting officer to insert in any such contract a clause providing that the records to be maintained under this paragraph shall be made available by the contractor or subcontractor for inspection, copying, or transcription by authorized representatives of the (write the name of agency) and the Department of Labor, and the contractor or subcontractor will permit such representatives to interview employees during working hours on the job.

O. Byrd Anti-Lobbying Amendment (31 U.S.C. 1352): Contractors that apply or bid for an award exceeding $100,000 must file the required certification. Each tier certifies to the tier above that it will not and has not used Federal appropriated funds to pay any person or organization for influencing or attempting to influence an officer or employee of any agency, a member of Congress, officer or employee of Congress, or an employee of a member of Congress in connection with obtaining any Federal contract, grant or any other award covered by 31 U.S.C. 1352. Each tier must also disclose any lobbying with non-Federal funds that takes place in connection with obtaining any Federal award. Such disclosures are forwarded from tier to tier up to the non-Federal award.

P. Affirmative Action/EOE: Bastrop County is an Affirmative Action/Equal Opportunity Employer and strives to attain goals for Section 3 of the Housing and Urban Development Act of 1968 (12U.S.C. 1701u) as amended. See Appendix F - Bastrop County Section 3 Resolution. During the performance of an awarded contract, the CONTRACTOR agrees as follows:

1. The CONTRACTOR will not discriminate against any employee or applicant for employment because of race, color, religion, sex, sexual orientation, gender identity, or national origin. The CONTRACTOR will take affirmative action to ensure that applicants are employed, and that employees are treated during employment without regard to their race, color, religion, sex, sexual orientation, gender identity, or national origin. Such action shall include, but not be limited to the following: Employment, upgrading,

demotion, or transfer; recruitment or recruitment advertising; layoff or termination; rates of pay or other forms of compensation; and selection for training, including apprenticeship. The CONTRACTOR agrees to post in conspicuous places. Available to employees and applicants for employment, notices to be provided setting forth the provisions of this nondiscrimination clause.

2. The CONTRACTOR will, in all solicitations or advertisements for employees placed by or on behalf of the CONSULTING FIRM, state that all qualified applicants will receive considerations for employment without regard to race, color, religion, sex, sexual orientation, gender identity, or national origin.

3. The CONTRACTOR will not discourage or in any other manner discriminate against any employee or applicant for employment because such employee or applicant has inquired about, discussed, or disclosed the compensation of the employee or applicant or another employee or applicant. This Provision shall not apply to instances in which an employee who has access to the compensation information of other employees or applicants as a part of such employee's essential job functions discloses the compensation of such other employees or applicants to individuals who do not otherwise have access to such information, unless such disclosure is in response to a forma l complaint or charge, in furtherance of an investigation, proceeding, hearing, or action, including an investigation conducted by the employer, or is consistent w1th the CONSULTING FIRM's legal duty to furnish information.

4. The CONTRACTOR will send to each labor union or representative of workers with which he has a collective bargaining agreement or other contract or understanding, a notice to be provided advising the said labor union or workers' representatives of the CONSULTING FIRM's commitments under this section, and shall post copies of the notice in conspicuous places available to employees and applicants for employment.

5. The CONTRACTOR will comply with all provisions of Executive Order 11246 of September 24, 1965, and of the rules, regulations, and relevant orders of the Secretary of Labor.

6. The CONTRACTOR will furnish all information and reports required by Executive Order 11246 of September 24, 1965, and by rules, regulations, and orders of the Secretary of Labor, or pursuant thereto, and will permit access to his books, records, and accounts by the administering agency and the Secretary of Labor for purposes of investigation to ascertain compliance w1th such rules, regulations and orders.

7. In the event of the CONSULTING FIRM's noncompliance with the nondiscrimination clauses of this contract or with any of the said rules, regulations, or orders, this contract may be canceled , terminated, or suspended in whole or in part and the CONTRACTOR may be declared ineligible for further Government contracts or federally assisted construction contracts in accordance with procedures authorized in Executive Order 11246 of September 24, 1965, and such other sanctions may be 1mposed and remedies invoked as provided in Executive Order 11246 of September 24, 1965, or by rule, regulation, or order of the Secretary of Labor, or as otherwise provided by law.

8. The CONTRACTOR will include the portion of the sentence Immediately preceding paragraph (1) and the provisions of paragraphs (1) through (7) in every subcontract or purchase order unless exempted by rules, regulations, or orders of the Secretary of Labor issued pursuant to section 204 of Executive Order 11246 of September 24, 1965, so that such provisions will be binding upon each subcontract or vendor. The CONTRACTOR will take such action with respect to any subcontract or purchase order as the administering agency may direct as a means of enforcing such provisions, including sanctions for noncompliance: Provided, however. That in the event a CONTRACTOR becomes involved in or is threatened with litigation with a subcontractor or vendor as a result of such direction by the administering agency the CONTRACTOR may request the United States to enter into such litigation to protect the interests of the United States.

9. The applicant further agrees that it will be bound by the above equal opportunity clause with respect to its own employment practices when it participates in federally assisted construction work: Provided, That if the applicant so participating is a State or local government, the above equal opportunity clause is not applicable to any agency, instrumentality or subdivision of such government wh1ch does not participate in work on or under the contract.

10. The applicant agrees that it will assist and cooperate actively with the administering agency and the Secretary of Labor in obtaining the compliance of CONSULTING FIRMs and subcontractors with the equal opportunity clause and the rules, regulations. and relevant orders of the Secretary of Labor, that it will furnish the administering agency and the Secretary of Labor such information as they may require for the supervision of such compliance, and that it will otherwise assist the administering agency in the discharge of the agency's primary responsibility for securing compliance.

11. The applicant further agrees that it will refra1n from entering into any contract or contract modification subject to Executive Order 11246 of September 24 , 1965, with a CONTRACTOR debarred from, or who has not demonstrated eligibility for, Government contracts and federally assisted construction contracts pursuant to the Executive order and will carry out such sanctions and penalties for violation of the equal opportunity clause as may be imposed upon CONSULTING FIRMs and subcontractor s by the administering agency or the Secretary of Labor pursuant to Part II, Subpart D of the Executive order . In addition, the applicant agrees that if it fails or refuses to comply with these undertakings. the administering agency may take any or all of the following actions: Cancel, terminate, or suspend in whole or in part this grant (contract, loan. insurance. guarantee); refrain from extending any further assistance to the applicant under the program with respect to which the failure or refund occurred until satisfactory assurance of future compliance has been received from such applicant; and refer the case to the Department of Justice for appropriate legal proceedings.

12. Subcontracts. Each nonexempt prime CONTRACTOR or subcontractor shall include the equal opportunity clause 1n each of its nonexempt subcontracts.

Q. Payment Terms: Unless otherwise specified in the Scope of Services or otherwise agreed to in writing by Bastrop County, payment terms for the County are Net 30 days upon receipt of invoice after receipt of goods or services. Pay applications must be submitted to the Bastrop County for approval and processing for payment. Bastrop County will pay approved invoices based on percentage of completion at the time of pay application submission pending verification from Bastrop County. Final approval will be based on an inspection of the project for verification of compliance with all aspects of the scope of work listed within Appendix A of this RFB. This price is full compensation for all task listed in the Bid submitted by the vendor and must include all necessary fees, charges and bonds needed to complete this work. Bastrop County will NOT pay any fees to the vendor other than the agreed upon Bid price.

R. Bid, Payment and Performance Bonds: The **CONTRACTOR IS REQUIRED** to furnish a good and sufficient bid bond or a cashier's check in the amount of five percent (5%) of the total bid price. A bid bond must be executed with a surety company authorized to do business in the State of Texas. The bid bond of the awarded contractor is subject to forfeiture in the event the successful bidder fails to execute all requirements set forth in the contract documents within ten days after the contract has been awarded. Payment and Performance bonds shall be required and issued for this contract should the total bid price reach the State of Texas threshold for public works projects. The contractor agrees that within ten (10) days after written notice to proceed is sent to them by Bastrop County, a **Payment Bond** will be executed and delivered to Bastrop County for one hundred percent (100%) of the estimated contract total, should the contract total meet and/or exceed twenty-five thousand dollars ($25,000). A **Performance Bond** in an amount of one hundred percent (100%) of the estimated contract price should also be executed and delivered to Bastrop County should the contract amount meet and/or exceed one hundred thousand dollars

($100,000). The Performance and Payment Bond must be maintained throughout the contract execution period. At the completion of all work, the Payment and Performance Bond shall be released. Cost of all bonds must be included in the bid price. Payment for services will not be made until receipt of all required bonds has been made to Bastrop County.

S. Liquidated Damages: Should the CONTRACTOR fail to complete the requirements set forth in the scope of work, Bastrop County will suffer damage. The amount of damage suffered by Bastrop County is difficult, if not impossible, to determine at this time. Therefore, the CONTRACTOR shall pay Bastrop County, as liquidated damages, the following:

- The CONTRACTOR shall pay Bastrop County, liquidated damages, $100 per day for each day past the specified completion date.
- The CONTRACTOR shall pay Bastrop County, liquidated damages, $1500 per incident where the CONTRACTOR fails to repair damages that are caused by the CONTRACTOR and/or sub-contractor(s). Application of liquidated damaged does not release the CONTRACTOR from the responsibility of resolving or repairing
- The amounts specified above are mutually agreed upon as reasonable and the proper amount of liquidated damages Bastrop County would suffer in the aforementioned examples.

T. Funding: State of Texas statutes prohibit the obligation and expenditure of public funds beyond the fiscal year for which a budget has been approved. Orders or other obligations that may arise beyond the end of the current fiscal year shall be subject to approval of budget funds.

U. Taxes: The County is exempt from all federal excise taxes and all state and local sales and use taxes. If such taxes are listed on a Bidder's invoice, they will not be paid.

V. Insurance: The Bidders, consistent with its status as an independent CONSULTING FIRM, shall carry, and shall require any of its subcontractors to carry, at least the following insurance in such form, with such companies, and in such amounts (unless otherwise specified) as County may require:

1. Worker's Compensation and Employer's Liability insurance, including All States Endorsement, to the extent required by federal law and complying with the laws of the State of Texas;
2. Commercial General Liability insurance, including Blanket Contractual Liability, Broad Form Property Damage, Personal Injury, Completed Operations/Products Liability, Premises Liability, Medical Payments, Interest of Employees as additional insureds, and Broad Form General Liability Endorsements, for at least One Million Dollars ($1,000,000) Combined Single Limit Bodily Injury and Property Damage on an occurrence basis;
3. Comprehensive Automobile Liability insurance covering all owned, non-owned or hired automobiles to be used by the CONSULTING FIRM, with coverage for at least One Million Dollars ($1,000,000) Combined Single Limit Bodily Injury and Property Damage.

CONTRACTOR shall submit proof to Bastrop County that said CONTRACTOR has the ability to meet all insurance requirements listed above.

W. Indemnification: Bidders agrees to defend, indemnify and hold harmless the County of Bastrop, all of its officers, agents, employees, appointees and volunteers from and against all claims, actions, suits, demands, proceedings, costs, damages and liabilities, including reasonable attorneys' fees, court costs, related expenses for personal injury (including death), property damage or other harm for which recovery of damages is sought, suffered by any person or persons, that may arise out of or be occasioned by Bidder's breach of any of the terms or provisions of any contract awarded as a result of this solicitation, or by any negligent or strictly liable act or omission of the Bidders, its officers, agents, employees, or subcontractors, in the performance of an awarded contract; except that the indemnity provided for in this paragraph shall not apply to any liability resulting from the sole negligence or fault of the County, its officers, agents or employees, and

in the event of joint and concurrent negligence or fault of the Bidders and County, responsibility and indemnity, if any, shall be apportioned comparatively in accordance with the laws of the State of Texas, without waiving any governmental immunity available to the County under Texas law and without waiving any defenses of the parties under Texas law. The provisions of this paragraph are solely for the benefit of the parties hereto and are not intended to create or grant any rights, contractual or otherwise, to any other person or entity.

IN SUBMITTING A RESPONSE TO THIS RFB, THE RESPONDENT AGREES THAT IT WAIVES ANY CLAIMS IT HAS OR MAY HAVE AGAINST THE COUNTY, THE COUNTY'S EMPLOYEES, OFFICERS, AGENTS, REPRESENTATIVES, AND THE MEMBERS OF THE COUNTY'S GOVERNING BODY IN CONNECTION WITH OR ARISING OUT OF THIS RFB, INCLUDING, THE ADMINISTRATION OF THE RFB, THE BASIS FOR SELECTION, THE EVALUATIONS OF THE RESPONSES, THE METHOD USED FOR SELECTION, AND ANY DISCLOSURE OF INFORMATION REGARDING THE RESPONSES OR EVALUATIONS. THE SUBMISSION OF A BID CONSTITUTES THE ACCEPTANCE BY THE RESPONDENT OF THE EVALUATION TECHNIQUE DESCRIBED IN THIS RFB. THE PERSON SIGNING ON BEHALF OF BIDDERS CERTIFIES THAT THE SIGNER HAS AUTHORITY TO SUBMIT THE BID ON BEHALF OF THE BIDDERS AND TO BIND THE BIDDERS TO ANY RESULTING CONTRACT

I ACKNOWLEDGE THAT I HAVE READ AND UNDERSTAND ALL REQUIREMENTS SETFORTH IN THIS REQUEST FOR BIDS:

_____ _____

Authorized Signatory: Name of Company:

_____

Date:

APPENDIX C

CONFLICT OF INTEREST QUESTIONNAIRE

FORM CIQ

For vendor doing business with local governmental entity

This questionnaire reflects changes made to the law by H.B. 23, 84th Leg., Regular Session.

This questionnaire is being filed in accordance with Chapter 176, Local Government Code, by a vendor who has a business relationship as defined by Section 176.001(1-a) with a local governmental entity and the vendor meets requirements under Section 176.006(a).

By law this questionnaire must be filed with the records administrator of the local governmental entity not later than the 7th business day after the date the vendor becomes aware of facts that require the statement to be filed. *See* Section 176.006(a-1), Local Government Code.

A vendor commits an offense if the vendor knowingly violates Section 176.006, Local Government Code. An offense under this section is a misdemeanor.

OFFICE USE ONLY

Date Received

1 **Name of vendor who has a business relationship with local governmental entity.**

2 ☐ **Check this box if you are filing an update to a previously filed questionnaire.** (The law requires that you file an updated completed questionnaire with the appropriate filing authority not later than the 7th business day after the date on which you became aware that the originally filed questionnaire was incomplete or inaccurate.)

3 **Name of local government officer about whom the information is being disclosed.**

Name of Officer

4 **Describe each employment or other business relationship with the local government officer, or a family member of the officer, as described by Section 176.003(a)(2)(A). Also describe any family relationship with the local government officer. Complete subparts A and B for each employment or business relationship described. Attach additional pages to this Form CIQ as necessary.**

A. Is the local government officer or a family member of the officer receiving or likely to receive taxable income, other than investment income, from the vendor?

☐ Yes ☐ No

B. Is the vendor receiving or likely to receive taxable income, other than investment income, from or at the direction of the local government officer or a family member of the officer AND the taxable income is not received from the local governmental entity?

☐ Yes ☐ No

5 **Describe each employment or business relationship that the vendor named in Section 1 maintains with a corporation or other business entity with respect to which the local government officer serves as an officer or director, or holds an ownership interest of one percent or more.**

6 ☐ Check this box if the vendor has given the local government officer or a family member of the officer one or more gifts as described in Section 176.003(a)(2)(B), excluding gifts described in Section 176.003(a-1).

7

Signature of vendor doing business with the governmental entity

Date

CONFLICT OF INTEREST QUESTIONNAIRE
For vendor doing business with local governmental entity

A complete copy of Chapter 176 of the Local Government Code may be found at http://www.statutes.legis.state.tx.us/Docs/LG/htm/LG.176.htm. For easy reference, below are some of the sections cited on this form.

Local Government Code § 176.001(1-a): "Business relationship" means a connection between two or more parties based on commercial activity of one of the parties. The term does not include a connection based on:

(A) a transaction that is subject to rate or fee regulation by a federal, state, or local governmental entity or an agency of a federal, state, or local governmental entity;

(B) a transaction conducted at a price and subject to terms available to the public; or

(C) a purchase or lease of goods or services from a person that is chartered by a state or federal agency and that is subject to regular examination by, and reporting to, that agency.

Local Government Code § 176.003(a)(2)(A) and (B):

(a) A local government officer shall file a conflicts disclosure statement with respect to a vendor if:

***

(2) the vendor:

(A) has an employment or other business relationship with the local government officer or a family member of the officer that results in the officer or family member receiving taxable income, other than investment income, that exceeds $2,500 during the 12-month period preceding the date that the officer becomes aware that

(i) a contract between the local governmental entity and vendor has been executed; or

(ii) the local governmental entity is considering entering into a contract with the vendor;

(B) has given to the local government officer or a family member of the officer one or more gifts that have an aggregate value of more than $100 in the 12-month period preceding the date the officer becomes aware that:

(i) a contract between the local governmental entity and vendor has been executed; or

(ii) the local governmental entity is considering entering into a contract with the vendor.

Local Government Code § 176.006(a) and (a-1)

(a) A vendor shall file a completed conflict of interest questionnaire if the vendor has a business relationship with a local governmental entity and:

(1) has an employment or other business relationship with a local government officer of that local governmental entity, or a family member of the officer, described by Section 176.003(a)(2)(A);

(2) has given a local government officer of that local governmental entity, or a family member of the officer, one or more gifts with the aggregate value specified by Section 176.003(a)(2)(B), excluding any gift described by Section 176.003(a-1); or

(3) has a family relationship with a local government officer of that local governmental entity.

(a-1) The completed conflict of interest questionnaire must be filed with the appropriate records administrator not later than the seventh business day after the later of:

(1) the date that the vendor:

(A) begins discussions or negotiations to enter into a contract with the local governmental entity; or

(B) submits to the local governmental entity an application, response to a request for proposals or bids, correspondence, or another writing related to a potential contract with the local governmental entity; or

(2) the date the vendor becomes aware:

(A) of an employment or other business relationship with a local government officer, or a family member of the officer, described by Subsection (a);

(B) that the vendor has given one or more gifts described by Subsection (a); or

(C) of a family relationship with a local government officer.

APPENDIX D

STATEMENT OF BIDDER'S QUALIFICATIONS

All questions must be answered and the data given must be clear and comprehensive. **This statement must be notarized.** If necessary, questions may be answered on separate attached sheets. The Bidder may submit any additional information it desires.

Date: _____

Bidder (Legal Name of Firm):_____

Date Organized:_____

Address :_____

_____ :_____

Date Incorporated_____

Federal ID Number: _____

Number of Years in contracting business under present name_____

List all other names under which your business has operated in the last 10 years:

_____

_____

Work Presently Under Contract:

Contract	Amount $	Completion Date

Type of work performed by your company: _____

Total Staff employed by Firm (Break down by Managers and Trades on separate sheet):

_____

_____

_____

Have you ever failed to complete any work awarded to you?☐ Yes ☐ No
(If yes, please attach summary of details on a separate sheet. Include brief explanation of cause and resolution)

Have you ever defaulted on a contract?☐ Yes ☐ No
(If yes, please attach summary of details on a separate sheet.)

Has your organization had any disbarments or suspensions that have been imposed in the past five years or that was still in effect during the five year period or is still in effect? ☐ Yes ☐ No

(If yes, list and explain; such list must include disbarments and suspensions of officers, principals, partners, members, and employees of your organization.)

List the projects most recently completed by your firm (include project of similar importance):

Project Amount $ Mo/Yr Completed

_____

_____

_____

Major equipment available for this contract: _____

_____

_____

Are you in compliance with all applicable EEO requirements? ☐ Yes ☐ No
(If no, please attach summary of details on a separate sheet.))

Bank References

Address: _____ Contact Name: _____

City & State: _____Zip: _____Phone Number: _____

Credit available: $ _____

Has the firm or predecessor firm been involved in a bankruptcy or reorganization? ☐ Yes ☐ No
(If yes, please attach summary of details on a separate sheet.)

List on a sheet attached hereto all judgements, claims, arbitration proceedings, or suits pending or outstanding against bidder over the last five (5) years with amount of claim and brief description.

List on a sheet attached hereto all lawsuits or requested arbitration with regard to construction contracts which bidder has initiated within the last five (5) years and brief explanation of claim and outcome.

Attach resume(s) for the principal member(s) of your organization, including the officers as well as the proposed superintendent for the project.

Signed this _____ day of _____, 20____.

_____
Signature

_____
Printed Name and Title

_____
Company Name

Notary Statement:

_____, being duly sworn, says that he/she is the _____Position/Title_____of_____ (Firm Name), and hereby swears that the answers to the foregoing questions and all statements therein contained are true and correct. He/she hereby authorizes and requests any person, firm, or corporation to furnish any information requested City/County of _____ in verification of the recitals comprising this Statement of Bidder's Qualifications.

Subscribed and sworn before me this _____day of _____, 20____.

Notary Public

_____

Signature

_____

Printed Name

My Commission Expires: _____,

The penalty for making false statements is prescribed in the U. S. Criminal Code, 18 U.S.C. 1001.

APPENDIX E

Implementation of House Bill 1295

Certificate of Interested Parties (Form 1295):

In 2015, the Texas Legislature adopted House Bill 1295, which added section 2252.908 of the Government Code. The law states that a governmental entity or state agency may not enter into certain contracts with a business entity unless the business entity submits a disclosure of interested parties to the governmental entity or state agency at the time the business entity submits the signed contract to the governmental entity or state agency.

The law applies (with a few exceptions) only to a contract between a business entity and a governmental entity or state agency that either (1) requires an action or vote by the governing body of the entity or agency before the contract may be signed or (2) has a value of at least $1 million. The disclosure requirement applies to a contract entered into on or after January 1, 2016.

Changed or Amended Contracts:

Form 1295 is only required for a change made to an existing contract in certain circumstances: (1) if a Form 1295 was not filed for the existing contract, then a filing is only required if the changed contract either requires an action or vote by the governing body or the value of the changed contract is at least $1 million; or (2) if a Form 1295 was filed for the existing contract, then another filing is only required for the changed contract if there is a change to the information disclosed in the Form 1295, the changed contract requires an action or vote by the governing body, or the value of the changed contract increases by at least $1 million.

As required by law, the Commission adopted the Certificate of Interested Parties form (Form 1295) on October 5, 2015. The Commission also adopted rules (Chapter 46) to implement the law. The Commission does not have any additional authority to enforce or interpret section 2252.908 of the Government Code.

Filing Process:

A business entity must use the Form 1295 filing application the Commission created to enter the required information on Form 1295 and print a copy of the completed form. Once entered into the filing application, the completed form will include a unique certification number, called a "certification of filing."

An authorized agent of the business entity must sign the printed copy of the form affirming under the penalty of perjury that the completed form is true and correct.

The completed, printed, and signed Form 1295 bearing the unique certification of filing number must be filed with the governmental body or state agency with which the business entity is entering into the contract.

Acknowledgement by State Agency or Governmental Entity:

The governmental entity or state agency must acknowledge receipt of the filed Form 1295 with the certification of filing, using the Commission's filing application, not later than the 30th day after the date the governing body or state agency receives the Form 1295. The Commission will post the completed Form 1295 to its website within seven business days after the governmental entity or state agency acknowledges receipt of the form.

Changes to Form 1295

Changes to the law requiring certain businesses to file a Form 1295 are in effect for contracts entered into or amended on or after January 1, 2018. The changes exempt businesses from filing a Form 1295 for certain types of contracts and replace the need for a completed Form 1295 to be notarized. Instead, the person filing a 1295 needs to complete an "unsworn declaration."

What type of contracts are exempt from the Form 1295 filing requirement under the amended law?

The amended law adds to the list of types of contract exempt from the Form 1295 filing requirement. A completed Form 1295 is not required for:

- A sponsored research contract of an institution of higher education;
- An interagency contract of a state agency or an institution of higher education;

- A contract related to health and human services if: o the value of the contract cannot be determined at the time the contract is executed; and o any qualified vendor is eligible for the contract;
- A contract with a publicly traded business entity, including a wholly owned subsidiary of the business entity;*
- A contract with an electric utility, as that term is defined by Section 31.002, Utilities Code;* or
- A contract with a gas utility, as that term is defined by Section 121.001, Utilities Code.*

The newly exempt contract types are marked with an asterisk.

Why do I need to include my date of birth and address when I sign Form 1295? Was this always the case?
In 2017, the legislature amended the law to require Form 1295 to include an "unsworn declaration" which includes, among other things, the date of birth and address of the authorized representative signing the form. The change in the law applies to contracts entered into, renewed, or amended on or after January 1, 2018. The unsworn declaration, including the date of birth and address of the signatory, replaces the notary requirement that applied to contracts entered into before January 1, 2018.

Will my date of birth and address appear on the TEC's website when I file the form?
No. The TEC filing application does not capture the date of birth or street address of the signatory and it will not appear on forms that are filed using the TEC filing application. Although the TEC does not capture the date of birth and street address of the signatory, the contracting state agency or governmental agency will have a physical copy of the form that includes the date of birth and address of the signatory. The TEC cannot answer whether the contracting state agency or governmental agency may release such information. Questions regarding the Texas Public Information Act may be directed to the Office of the Attorney General. See also Paxton v. City of Dall., No. 03-13-00546-CV, 2015 Tex. App. LEXIS 5228, at *10-11 (App.—Austin May 22, 2015) (mem. op.) (pet. denied) (available here).

CERTIFICATE OF INTERESTED PARTIES

FORM 1295

OFFICE USE ONLY

Complete Nos. 1 - 4 and 6 if there are interested parties.
Complete Nos. 1, 2, 3, 5, and 6 if there are no interested parties.

1 Name of business entity filing form, and the city, state and country of the business entity's place of business.

2 Name of governmental entity or state agency that is a party to the contract for which the form is being filed.

3 Provide the identification number used by the governmental entity or state agency to track or identify the contract, and provide a description of the services, goods, or other property to be provided under the contract.

4

Name of Interested Party	City, State, Country (place of business)	Nature of Interest (check applicable)	
		Controlling	Intermediary

5 Check only if there is NO Interested Party. ☐

6 UNSWORN DECLARATION

My name is _____, and my date of birth is _____.

My address is _____, _____, _____, _____, _____.
(street) (city) (state) (zip code) (country)

I declare under penalty of perjury that the foregoing is true and correct.

Executed in _____ County, State of _____ , on the _____ day of _____, 20_____.
(month) (year)

_____
Signature of authorized agent of contracting business entity
(Declarant)

ADD ADDITIONAL PAGES AS NECESSARY

Must file online at www.ethics.state.tx.us/File

APPENDIX F

House Bill 89 VERIFICATION

I, _____, the undersigned representative of _____ (hereafter referred to as company) being an adult over the age of eighteen (18) years of age, after being duly sworn by the undersigned notary, do hereby depose and verify under oath that the company named-above, under the provisions of Subtitle F, Title 10, Government Code Chapter 2270::

1. **Does not boycott Israel currently; and**
2. **Will not boycott Israel during the term of the contract the above-named Company, business or individual with Bastrop County, Texas.**

Pursuant to Section 2270.001, Texas Government Code:

1. *"Boycott Israel" means refusing to deal with, terminating business activities with, or otherwise taking any action that is intended to penalize, inflict economic harm on, or limit commercial relations specifically with Israel, or with a person or entity doing business in Israel or in an Israeli-controlled territory, but does not include an action made for ordinary business purposes; and*
2. *"Company" means a for-profit sole proprietorship, organization, association, corporation, partnership, joint venture, limited partnership, limited liability partnership, or any limited liability company, including a wholly owned subsidiaryt, majority-owned subsidiary, parent company or affiliate of those entities or business associations that exist to make a profit.*

_____ _____

DATE SIGNATURE OF COMPANY REPRESENTATIVE

ON THIS THE _____ day of _____, 20____, personally appeared _____, the above-named person, who after by me being duly sworn, did swear and confirm that the above is true and correct.

NOTARY SEAL _____

NOTARY SIGNATURE

APPENDIX G

Section 3 Policy

In accordance with 12 U.S.C. 1701u Bastrop County agrees to implement the following steps, which, to *the greatest extent feasible*, will provide job training, employment and contracting opportunities for Section 3 residents and Section 3 businesses of the areas in which the program/project is being carried out.

A. Introduce and pass a resolution adopting this plan as a policy to strive to attain goals for compliance to Section 3 regulations by increasing opportunities for employment and contracting for Section 3 residents and businesses.

B. Assign duties related to implementation of this plan to the designated Civil Rights Officer.

C. Notify Section 3 residents and business concerns of potential new employment and contracting opportunities as they are triggered by CDBG grant awards through the use of: Public Hearings and related advertisements; public notices; bidding advertisements and bid documents; notification to local business organizations such as the Chamber(s) of Commerce or the Urban League; local advertising media including public signage; project area committees and citizen advisory boards; local HUD offices; regional planning agencies; and all other appropriate referral sources. Include Section 3 clauses in all covered solicitations and contracts.

D. Maintain a list of those businesses that have identified themselves as Section 3 businesses for utilization in CDBG funded procurements, notify those businesses of pending contractual opportunities, and make this list available for general Grant Recipient procurement needs.

E. Maintain a list of those persons who have identified themselves as Section 3 residents and contact those persons when hiring/training opportunities are available through either the Grant Recipient or contractors.

F. Require that all Prime contractors and subcontractors with contracts over $100,000 commit to this plan as part of their contract work. Monitor the contractors' performance with respect to meeting Section 3 requirements and require that they submit reports as may be required by HUD or GLO to the Grant Recipient.

G. Submit reports as required by HUD or GLO regarding contracting with Section 3 businesses and/or employment as they occur; and submit reports within 20 days of the federal fiscal year end (by October 20) which identify and quantify Section 3 businesses and employees.

H. Maintain records, including copies of correspondence, memoranda, etc., which document all actions taken to comply with Section 3 regulations.

As officers and representatives of Bastrop County, we the undersigned have read and fully agree to this plan, and become a party to the full implementation of this program.

Paul Pape

Signature

Paul Pape 9-23-19

County Judge Date

RESOLUTION

AN AMENDMENT TO A RESOLUTION OF THE COMMISSIONERS' COURT OF THE COUNTY OF BASTROP, TEXAS DATED APRIL 22, 2013 AUTHORIZING THE COUNTY JUDGE OR HIS DESIGNEE TO IMPLEMENT A SECTION 3 PROGRAM, WHICH TO THE GREATEST EXTENT FEASIBLE, WILL PROVIDE JOB TRAINING, EMPLOYMENT, AND CONTRACTING OPPORTUNITIES FOR SECTION 3 BUSINESSES OF THE AREA IN WHICH THE TEXAS COMMUNITY DEVELOPMENT BLOCK GRANT (TXCDBG} PROGRAM/PROJECT IS BEING CARRIED OUT.

WHEREAS; Section 3 of the Housing and Urban Development Act of 1968 (12 U.S.C. 1701u), as amended, requires that Bastrop County ensure that training, employment and other economic opportunities generated by certain HUD financial assistance for housing and Community Development Programs shall, to the greatest extent feasible, be given to low- and very low- income persons, particularly those who are recipients of governmental assistance for housing, and to businesses that provide economic opportunities for these persons, and

WHEREAS; the County of Bastrop has been grant funded for various projects under the Texas Community Development Block Grant Program (CDBG), and

WHEREAS; the County of Bastrop is required to adopt a Section 3 Program as part of the requirements of the grant(s), and

WHEREAS; a Section 3 resident is defined as a public housing resident and/or a low to very-low income person who lives in an area where a CDBG assisted project is located, and

WHEREAS; a Section 3 business is defined as a business that has a Section 3 resident own at least 51 percent or more of the business or have at least 30 percent of the permanent, full-time employees of the business identified as Section 3 residents, and

WHEREAS; the County of Bastrop will strive to attain goals for compliance with Section 3 regulations;

NOW THEREFORE BE IT RESOLVED BY THE COMMISSIONERS' COURT OF BASTROP COUNTY, TEXAS:

1. The COMMISSIONERS' COURT has reviewed and hereby agrees to Implement the following steps, which, to the greatest extent feasible, will provide job training, employment and contracting opportunities for Section 3 residents and Section 3 businesses of the area in which the CDBG program/project is being carried out.

2. The COMMISSIONERS' COURT hereby agrees to strive to attain goals for compliance with Section 3 regulations by increasing opportunities for employment and contracting with Section 3 residents and businesses where feasible.

3. The COMMISSIONERS' COURT hereby agrees to assign duties related to implementation of this plan to the designated Section 504 and Equal

Opportunity/Fair Housing Officer.

4. The COMMISSIONERS COURT hereby delegates to the County Judge the authority to implement measures that comply with the Section 3 goals and to assign duties for carrying out these measures to County personnel and/or third party consultant(s).

5. The COMMISSIONERS' COURT hereby agrees that the County will Notify Section 3 residents and business concerns of potential new employment and contracting opportunities as they are triggered by CDBG grant awards through the use of: public notices; bidding advertisements and bid documents; local advertising media including public signage; and Including Section 3 clauses In all CDBG solicitations and contracts.

6. The COMMISSIONERS' COURT hereby agrees to maintain a list of those businesses that have identified themselves as Section 3 businesses for utilization in CDBG funded procurements, notify those businesses of pending contractual opportunities, and make this list available for general Grant Recipient procurement needs.

7. The COMMISSIONERS' COURT hereby agrees to maintain a list of those persons who have identified themselves as Section 3 residents and contact those persons when hiring/training opportunities are available through either the Grant Recipient or contractors.

8. The COMMISSIONERS' COURT hereby agrees to require that all Prime contractors and subcontractors on CDBG projects commit to this plan as part of their contract work; monitor the contractors' performance with respect to meeting Section 3 requirements, and require that they submit reports as may be required to the Bastrop County.

9. The COMMISSIONERS' COURT hereby agrees to submit reports as required by the CDBG program regarding contracting with Section 3 businesses and/or employment as they occur; and submit reports within 20 days of calendar year end which identify and quantify Section 3 businesses and employees.

10. The COMMISSIONERS' COURT hereby agrees to maintain records for the CDBG program, including copies of correspondence, memoranda, etc., which document all actions taken to comply with Section 3 regulations.

11. The COMMISSIONERS COURT hereby orders that the following procedures will be implemented to assure compliance with the intent of this Resolution:
    a. The County Judge will appoint one or more county employees to coordinate the Section 3 responsibilities for compliance and monitoring of all Section 3 activities for CDBG Disaster Recovery Program funded projects. The County may also engage the services of third party consultants to assist.

    b. Preference shall be awarded to Section 3 Business Concerns according to the following system:

1) Where the Section 3 Covered Contract is to be awarded to the lowest responsible bidder, then to the extent permitted by applicable law, the contract, if awarded, shall be awarded to the qualified Section 3 Business Concern with the lowest bid, if it is reasonable and no more than 10 percent higher than the lowest bid from any qualified source. If no bid by a qualified Section 3 Business Concern is within 10 percent of the lowest bid from any qualified source, then any contract award shall be made to the source with the lowest bid.

2) Where the Section 3 Covered Contract is to be awarded based on factors in addition to price, a request for proposals shall be issued by developing the particulars of the solicitation, including a rating system for the assignment of points to evaluate the merits of each response. The solicitation shall identify all factors to be considered, including price or cost. The rating system shall provide for a range of 15 to 25 percent of the total number of available rating points to be set aside for the award to respondents who have demonstrated a commitment to meet Section 3 requirements set out below in Section 11 c. If an award is made, the contract shall be awarded to the responsible firm whose proposal provides the best value to the County, considering price and all other factors specified in the rating system.

c. In responding to a solicitation (Request for Bids, Request for Proposals, etc.) for a Section 3 covered contract, all contractors and subcontractors are required to comply with the Bastrop County Section 3 Plan. The contractor and the County will review the Section 3 Plan procedures and applicable forms that the contractor will use to report progress toward Section 3 goals. The Section 3 requirements also apply to contracts with consultants for a Section 3 covered contract.

d. All general contractors and/or sub-contractors shall set a goal that 30 percent of new hires will be Section 3 residents. Contractors should provide job opportunities for skilled and unskilled workers. All Contractors and Subcontractors will be required to post all new hire opportunities with the local Workforce Solutions Center, WorkinTexas.com, and Bastrop County.

e. Bastrop County will analyze and evaluate the contractor's compliance with requirements and obligations set forth in the contract. In the event that a review reveals a contractor has not complied with Section 3 requirements, the County will undertake efforts to help the contractor achieve compliance.

f. The contractor and or sub-contractor shall submit monthly

reports regarding the status of each Section 3 participant. An annual report will also be requested from each contractor and/or subcontractor in connection to the performance of each project. This Annual Report will document the efforts and success of all Section 3 participants and subcontractors working under the general contractor, in reaching the percentage goals for employment and business opportunities established in these policies.

g. The contractor and/or subcontractor shall submit weekly-certified payroll reports to Bastrop County. This report shall be submitted weekly and clearly identify Section 3 Hires.

h. Bastrop County or its consultant will conduct periodic site visits to the worksite. The Coordinator shall visibly notice each Section 3 hire on site. The general contractor will sign a monitoring form verifying that a Section 3 worker is present.

i. Complaints regarding the County's Section 3 Program must be submitted in writing. All complaints must include the complainant's name, address, telephone number, and a brief narrative detailing the complaint, including but not limited to, the date of the alleged violation and the date the alleged violation was discovered. Complaints shall be filed within 30 calendar days after the complainant becomes aware of any alleged violation. Bastrop County will investigate every complaint. All parties involved will have the opportunity to submit testimony and/or evidence as may be available and relevant to the complaint, and a written determination will be issued within 30 days after the filing of the complaint. Filing a complaint does not terminate a contractor's Section 3 requirements. Contractors remain accountable for fulfilling the agreed upon Section 3 requirements.

As officers and representatives of the County of Bastrop, we the undersigned have read and fully agree and become a party to the full implementation of this program.

PASSED AND ADOPTED at a regular meeting of the COMMISSIONERS' COURT of the County held on the 22nd day of June 2015.

Paul Pape

Paul Pape, County Judge

ATTEST:

Rose Pietsch

Rose Pietsch, County Clerk

APPENDIX H

A. APPLICABILITY

The Project or Program to which the construction work covered by this Contract pertains is being assisted by the United States of America, and the following Federal Labor Standards Provisions are included in this Contract pursuant to the provisions applicable to such Federal assistance.

1. Minimum wages and fringe benefits

i. All laborers and mechanics employed or working upon the site of the work (or otherwise working in construction or development of the project under a development statute), will be paid unconditionally and not less often than once a week, and without subsequent deduction or rebate on any account (except such payroll deductions as are permitted by regulations issued by the Secretary of Labor under the Copeland Act (29 CFR part 3)), the full amount of basic hourly wages and bona fide fringe benefits (or cash equivalents thereof) due at time of payment computed at rates not less than those contained in the wage determination of the Secretary of Labor which is attached hereto and made a part hereof, regardless of any contractual relationship which may be alleged to exist between the contractor and such laborers and mechanics. As provided in 29 CFR 5.5(d) and (e), the appropriate wage determinations are effective by operation of law even if they have not been attached to the contract. Contributions made or costs reasonably anticipated for bona fide fringe benefits under the Davis-Bacon Act (40 U.S.C. 3141(2)(B)) on behalf of laborers or mechanics are considered wages paid to such laborers or mechanics, subject to the provisions of paragraph (a)(1)(v) of these contract clauses; also, regular contributions made or costs incurred for more than a weekly period (but not less often than quarterly) under plans, funds, or programs which cover the particular weekly period, are deemed to be constructively made or incurred during such weekly period. Such laborers and mechanics must be paid the appropriate wage rate and fringe benefits on the wage determination for the classification(s) of work actually performed, without regard to skill, except as provided in 29 CFR 5.5(a)(4). Laborers or mechanics performing work in more than one classification may be compensated at the rate specified for each classification for the time actually worked therein: *Provided,* That the employer's payroll records accurately set forth the time spent in each classification in which work is performed. The wage determination (including any additional classifications and wage rates conformed under 29 CFR 5.5(a)(1)(iii)) and the Davis-Bacon poster (WH-1321) must be posted at all times by the contractor and its subcontractors at the site of the work in a prominent and accessible place where it can be easily seen by the workers.

ii. Frequently recurring classifications

A. In addition to wage and fringe benefit rates that have been determined to be prevailing under the procedures set forth in 29 CFR part 1, a wage determination may contain, pursuant to § 1.3(f), wage and fringe benefit rates for classifications of laborers and mechanics for which conformance requests are regularly submitted pursuant to 29 CFR 5.5(a)(1)(iii), provided that:

1. The work performed by the classification is not performed by a classification in the wage determination for which a prevailing wage rate has been determined;

2. The classification is used in the area by the construction industry; and

3. The wage rate for the classification bears a reasonable relationship to the prevailing wage rates contained in the wage determination.

B. The Administrator will establish wage rates for such classifications in accordance with 29 CFR 5.5(a)(1)(iii)(A)(3). Work performed in such a classification must be paid at no less than the wage and fringe benefit rate listed on the wage determination for such classification.

iii. Conformance

A. The contracting officer must require that any class of laborers or mechanics, including helpers, which is not listed in the wage determination and which is to be employed under the contract be

classified in conformance with the wage determination. Conformance of an additional classification and wage rate and fringe benefits is appropriate only when the following criteria have been met:

1. The work to be performed by the classification requested is not performed by a classification in the wage determination; and
2. The classification is used in the area by the construction industry; and
3. The proposed wage rate, including any bona fide fringe benefits, bears a reasonable relationship to the wage rates contained in the wage determination.

B. The conformance process may not be used to split, subdivide, or otherwise avoid application of classifications listed in the wage determination.

C. If the contractor and the laborers and mechanics to be employed in the classification (if known), or their representatives, and the contracting officer agree on the classification and wage rate (including the amount designated for fringe benefits where appropriate), a report of the action taken will be sent by the contracting officer by email to DBAconformance@dol.gov. The Administrator, or an authorized representative, will approve, modify, or disapprove every additional classification action within 30 days of receipt and so advise the contracting officer or will notify the contracting officer within the 30–day period that additional time is necessary.

D. In the event the contractor, the laborers or mechanics to be employed in the classification or their representatives, and the contracting officer do not agree on the proposed classification and wage rate (including the amount designated for fringe benefits, where appropriate), the contracting officer will, by email to DBAconformance@dol.gov, refer the questions, including the views of all interested parties and the recommendation of the contracting officer, to the Administrator for determination. The Administrator, or an authorized representative, will issue a determination within 30 days of receipt and so advise the contracting officer or will notify the contracting officer within the 30–day period that additional time is necessary.

E. The contracting officer must promptly notify the contractor of the action taken by the Wage and Hour Division under 29 CFR 5.5 (a)(1)(iii)(C) and (D). The contractor must furnish a written copy of such determination to each affected worker or it must be posted as a part of the wage determination. The wage rate (including fringe benefits where appropriate) determined pursuant to 29 CFR 5.5 (a)(1)(iii)(C) or (D) must be paid to all workers performing work in the classification under this contract from the first day on which work is performed in the classification.

iv. Fringe benefits not expressed as an hourly rate

Whenever the minimum wage rate prescribed in the contract for a class of laborers or mechanics includes a fringe benefit which is not expressed as an hourly rate, the contractor may either pay the benefit as stated in the wage determination or may pay another bona fide fringe benefit or an hourly cash equivalent thereof.

v. Unfunded plans

If the contractor does not make payments to a trustee or other third person, the contractor may consider as part of the wages of any laborer or mechanic the amount of any costs reasonably anticipated in providing bona fide fringe benefits under a plan or program, *Provided,* That the Secretary of Labor has found, upon the written request of the contractor, in accordance with the criteria set forth in 29 CFR 5.28, that the applicable standards of the Davis-Bacon Act have been met. The Secretary of Labor may require the contractor to set aside in a separate account assets for the meeting of obligations under the plan or program.

vi. Interest In the event of a failure to pay all or part of the wages required by the contract, the contractor will be required to pay interest on any underpayment of wages.

2. **Withholding**

   i. **Withholding requirements**

   The U. S. Department of Housing and Urban Development may, upon its own action, or must, upon written request of an authorized representative of the Department of Labor, withhold or cause to be withheld from the contractor so much of the accrued payments or advances as may be considered necessary to satisfy the liabilities of the prime contractor or any subcontractor for the full amount of wages and monetary relief, including interest, required by the clauses set forth in 29 CFR 5.5(a) for violations of this contract, or to satisfy any such liabilities required by any other Federal contract, or federally assisted contract subject to Davis-Bacon labor standards, that is held by the same prime contractor (as defined in 29 CFR 5.2). The necessary funds may be withheld from the contractor under this contract, any other Federal contract with the same prime contractor, or any other federally assisted contract that is subject to Davis-Bacon labor standards requirements and is held by the same prime contractor, regardless of whether the other contract was awarded or assisted by the same agency, and such funds may be used to satisfy the contractor liability for which the funds were withheld. In the event of a contractor's failure to pay any laborer or mechanic, including any apprentice or helper working on the site of the work (or otherwise working in construction or development of the project under a development statute) all or part of the wages required by the contract, or upon the contractor's failure to submit the required records as discussed in 29 CFR 5.5(a)(3)(iv), HUD may on its own initiative and after written notice to the contractor, sponsor, applicant, owner, or other entity, as the case may be, take such action as may be necessary to cause the suspension of any further payment, advance, or guarantee of funds until such violations have ceased.

   ii. **Priority to withheld funds**

   The Department has priority to funds withheld or to be withheld in accordance with 29 CFR 5.5(a)(2)(i) or (b)(3)(i), or both, over claims to those funds by:

   A. A contractor's surety(ies), including without limitation performance bond sureties and payment bond sureties;

   B. A contracting agency for its reprocurement costs;

   C. A trustee(s) (either a court-appointed trustee or a U.S. trustee, or both) in bankruptcy of a contractor, or a contractor's bankruptcy estate;

   D. A contractor's assignee(s);

   E. A contractor's successor(s); or

   F. A claim asserted under the Prompt Payment Act, 31 U.S.C. 3901-3907.

3. **Records and certified payrolls**

   i. **Basic record requirements**

   A. Length of record retention. All regular payrolls and other basic records must be maintained by the contractor and any subcontractor during the course of the work and preserved for all laborers and mechanics working at the site of the work (or otherwise working in construction or development of the project under a development statute) for a period of at least 3 years after all the work on the prime contract is completed.

   B. Information required Such records must contain the name; Social Security number; last known address, telephone number, and email address of each such worker; each worker's correct classification(s) of work actually performed; hourly rates of wages paid (including rates of contributions or costs anticipated for bona fide fringe benefits or cash equivalents thereof of the types described in 40 U.S.C. 3141(2)(B) of the Davis-Bacon Act); daily and weekly number of hours actually worked in total and on each covered contract; deductions made; and actual wages paid.

   C. Additional records relating to fringe benefits*.* Whenever the Secretary of Labor has found under 29 CFR 5.5(a)(1)(v) that the wages of any laborer or mechanic include the amount of any

costs reasonably anticipated in providing benefits under a plan or program described in 40 U.S.C. 3141(2)(B) of the Davis-Bacon Act, the contractor must maintain records which show that the commitment to provide such benefits is enforceable, that the plan or program is financially responsible, and that the plan or program has been communicated in writing to the laborers or mechanics affected, and records which show the costs anticipated or the actual cost incurred in providing such benefits.

D. **Additional records relating to apprenticeship** Contractors with apprentices working under approved programs must maintain written evidence of the registration of apprenticeship programs, the registration of the apprentices, and the ratios and wage rates prescribed in the applicable programs.

ii. **Certified payroll requirements**

A. **Frequency and method of submission** The contractor or subcontractor must submit weekly, for each week in which any DBA- or Related Acts-covered work is performed, certified payrolls to HUD if the agency is a party to the contract, but if the agency is not such a party, the contractor will submit the certified payrolls to the applicant, sponsor, owner, or other entity, as the case may be, that maintains such records, for transmission to HUD. The prime contractor is responsible for the submission of all certified payrolls by all subcontractors. A contracting agency or prime contractor may permit or require contractors to submit certified payrolls through an electronic system, as long as the electronic system requires a legally valid electronic signature; the system allows the contractor, the contracting agency, and the Department of Labor to access the certified payrolls upon request for at least 3 years after the work on the prime contract has been completed; and the contracting agency or prime contractor permits other methods of submission in situations where the contractor is unable or limited in its ability to use or access the electronic system

B. **Information required** The certified payrolls submitted must set out accurately and completely all of the information required to be maintained under 29 CFR 5.5(a)(3)(i)(B), except that full Social Security numbers and last known addresses, telephone numbers, and email addresses must not be included on weekly transmittals. Instead, the certified payrolls need only include an individually identifying number for each worker (*e.g.*, the last four digits of the worker's Social Security number). The required weekly certified payroll information may be submitted using Optional Form WH-347 or in any other format desired. Optional Form WH-347 is available for this purpose from the Wage and Hour Division Web site at *https://www.dol.gov/sites/dolgov/files/WHD/legacy/files/wh347.pdf* or its successor website. It is not a violation of this section for a prime contractor to require a subcontractor to provide full Social Security numbers and last known addresses, telephone numbers, and email addresses to the prime contractor for its own records, without weekly submission by the subcontractor to the sponsoring government agency (or the applicant, sponsor, owner, or other entity, as the case may be, that maintains such records).

C. **Statement of Compliance** Each certified payroll submitted must be accompanied by a "Statement of Compliance," signed by the contractor or subcontractor, or the contractor's or subcontractor's agent who pays or supervises the payment of the persons working on the contract, and must certify the following:

1. That the certified payroll for the payroll period contains the information required to be provided under 29 CFR 5.5(a)(3)(ii), the appropriate information and basic records are being maintained under 29 CFR 5.5 (a)(3)(i), and such information and records are correct and complete;
2. That each laborer or mechanic (including each helper and apprentice) working on the contract during the payroll period has been paid the full weekly wages earned, without rebate, either directly or indirectly, and that no deductions have been made either directly or indirectly

from the full wages earned, other than permissible deductions as set forth in 29 CFR part 3; and

3. That each laborer or mechanic has been paid not less than the applicable wage rates and fringe benefits or cash equivalents for the classification(s) of work actually performed, as specified in the applicable wage determination incorporated into the contract.

D. **Use of Optional Form WH-347** The weekly submission of a properly executed certification set forth on the reverse side of Optional Form WH-347 will satisfy the requirement for submission of the "Statement of Compliance" required by 29 CFR 5.5(a)(3)(ii)(C).

E. **Signature** The signature by the contractor, subcontractor, or the contractor's or subcontractor's agent must be an original handwritten signature or a legally valid electronic signature.

F. **Falsification** The falsification of any of the above certifications may subject the contractor or subcontractor to civil or criminal prosecution under 18 U.S.C. 1001 and 31 U.S.C. 3729.

G. **Length of certified payroll retention** The contractor or subcontractor must preserve all certified payrolls during the course of the work and for a period of 3 years after all the work on the prime contract is completed.

iii. **Contracts, subcontracts, and related documents** The contractor or subcontractor must maintain this contract or subcontract and related documents including, without limitation, bids, proposals, amendments, modifications, and extensions. The contractor or subcontractor must preserve these contracts, subcontracts, and related documents during the course of the work and for a period of 3 years after all the work on the prime contract is completed.

iv **Required disclosures and access**

A. **Required record disclosures and access to workers** The contractor or subcontractor must make the records required under 29 CFR 5.5(a)(3)(i)–(iii), and any other documents that HUD or the Department of Labor deems necessary to determine compliance with the labor standards provisions of any of the applicable statutes referenced by 29 CFR 5.1, available for inspection, copying, or transcription by authorized representatives of HUD or the Department of Labor, and must permit such representatives to interview workers during working hours on the job.

B. **Sanctions for non-compliance with records and worker access requirements** If the contractor or subcontractor fails to submit the required records or to make them available, or refuses to permit worker interviews during working hours on the job, the Federal agency may, after written notice to the contractor, sponsor, applicant, owner, or other entity, as the case may be, that maintains such records or that employs such workers, take such action as may be necessary to cause the suspension of any further payment, advance, or guarantee of funds. Furthermore, failure to submit the required records upon request or to make such records available, or to permit worker interviews during working hours on the job, may be grounds for debarment action pursuant to 29 CFR 5.12. In addition, any contractor or other person that fails to submit the required records or make those records available to WHD within the time WHD requests that the records be produced will be precluded from introducing as evidence in an administrative proceeding under 29 CFR part 6 any of the required records that were not provided or made available to WHD. WHD will take into consideration a reasonable request from the contractor or person for an extension of the time for submission of records. WHD will determine the reasonableness of the request and may consider, among other things, the location of the records and the volume of production.

C. **Required information disclosures** Contractors and subcontractors must maintain the full Social Security number and last known address, telephone number, and email address of each covered worker, and must provide them upon request to HUD if the agency is a party to

the contract, or to the Wage and Hour Division of the Department of Labor. If the Federal agency is not such a party to the contract, the contractor, subcontractor, or both, must, upon request, provide the full Social Security number and last known address, telephone number, and email address of each covered worker to the applicant, sponsor, owner, or other entity, as the case may be, that maintains such records, for transmission to HUD, the contractor, or the Wage and Hour Division of the Department of Labor for purposes of an investigation or other compliance action.

4. Apprentices and equal employment opportunity

i. Apprentices

A. Rate of pay Apprentices will be permitted to work at less than the predetermined rate for the work they perform when they are employed pursuant to and individually registered in a bona fide apprenticeship program registered with the U.S. Department of Labor, Employment and Training Administration, Office of Apprenticeship (OA), or with a State Apprenticeship Agency recognized by the OA. A person who is not individually registered in the program, but who has been certified by the OA or a State Apprenticeship Agency (where appropriate) to be eligible for probationary employment as an apprentice, will be permitted to work at less than the predetermined rate for the work they perform in the first 90 days of probationary employment as an apprentice in such a program. In the event the OA or a State Apprenticeship Agency recognized by the OA withdraws approval of an apprenticeship program, the contractor will no longer be permitted to use apprentices at less than the applicable predetermined rate for the work performed until an acceptable program is approved.

B. Fringe benefits Apprentices must be paid fringe benefits in accordance with the provisions of the apprenticeship program. If the apprenticeship program does not specify fringe benefits, apprentices must be paid the full amount of fringe benefits listed on the wage determination for the applicable classification. If the Administrator determines that a different practice prevails for the applicable apprentice classification, fringe benefits must be paid in accordance with that determination.

C. Apprenticeship ratio The allowable ratio of apprentices to journeyworkers on the job site in any craft classification must not be greater than the ratio permitted to the contractor as to the entire work force under the registered program or the ratio applicable to the locality of the project pursuant to 29 CFR 5.5(a)(4)(i)(D). Any worker listed on a payroll at an apprentice wage rate, who is not registered or otherwise employed as stated in 29 CFR 5.5(a)(4)(i)(A), must be paid not less than the applicable wage rate on the wage determination for the classification of work actually performed. In addition, any apprentice performing work on the job site in excess of the ratio permitted under this section must be paid not less than the applicable wage rate on the wage determination for the work actually performed.

D. Reciprocity of ratios and wage rates Where a contractor is performing construction on a project in a locality other than the locality in which its program is registered, the ratios and wage rates (expressed in percentages of the journeyworker's hourly rate) applicable within the locality in which the construction is being performed must be observed. If there is no applicable ratio or wage rate for the locality of the project, the ratio and wage rate specified in the contractor's registered program must be observed.

ii Equal employment opportunity The use of apprentices and journeyworkers under this part must be in conformity with the equal employment opportunity requirements of Executive Order 11246, as amended, and 29 CFR part 30.

5 Compliance with Copeland Act requirements. The contractor shall comply with the requirements of 29 CFR part 3, which are incorporated by reference in this contract.

6 **Subcontracts.** The contractor or subcontractor must insert in any subcontracts the clauses contained in 29 CFR 5.5(a)(1) through (11), along with the applicable wage determination(s) and such other clauses or contract modifications as the U.S. Department of Housing and
Urban Development may by appropriate instructions require, and a clause requiring the subcontractors to include these clauses and wage determination(s) in any lower tier subcontracts. The prime contractor is responsible for the compliance by any subcontractor or lower tier subcontractor with all the contract clauses in this section. In the event of any violations of these clauses, the prime contractor and any subcontractor(s) responsible will be liable for any unpaid wages and monetary relief, including interest from the date of the underpayment or loss, due to any workers of lower-tier subcontractors, and may be subject to debarment, as appropriate.

7 **Contract termination: debarment.** A breach of the contract clauses in 29 CFR 5.5 may be grounds for termination of the contract, and for debarment as a contractor and a subcontractor as provided in 29 CFR 5.12.

8 **Compliance with Davis-Bacon and Related Act requirements.** All rulings and interpretations of the Davis-Bacon and Related Acts contained in 29 CFR parts 1, 3, and 5 are herein incorporated by reference in this contract.

9 **Disputes concerning labor standards.** Disputes arising out of the labor standards provisions of this contract shall not be subject to the general disputes clause of this contract. Such disputes shall be resolved in accordance with the procedures of the Department of Labor set forth in 29 CFR parts 5, 6, and 7. Disputes within the meaning of this clause include disputes between the contractor (or any of its subcontractors) and the contracting agency, the U.S. Department of Labor, or the employees or their representatives.

10. **Certification of eligibility**.

i. By entering into this contract, the contractor certifies that neither it nor any person or firm who has an interest in the contractor's firm is a person or firm ineligible to be awarded Government contracts by virtue of 40 U.S.C. 3144(b) or 29 CFR 5.12(a).

ii. No part of this contract shall be subcontracted to any person or firm ineligible for award of a Government contract by virtue of 40 U.S.C. 3144(b) or 29 CFR 5.12(a).

iii. The penalty for making false statements is prescribed in the U.S. Code, Title 18 Crimes and Criminal Procedure, 18 U.S.C. 1001.

11 **Anti-retaliation** It is unlawful for any person to discharge, demote, intimidate, threaten, restrain, coerce, blacklist, harass, or in any other manner discriminate against, or to cause any person to discharge, demote, intimidate, threaten, restrain, coerce, blacklist, harass, or in any other manner discriminate against, any worker or job applicant for:

i. Notifying any contractor of any conduct which the worker reasonably believes constitutes a violation of the DBA, Related Acts, or 29 CFR parts 1, 3, or 5;

ii. Filing any complaint, initiating or causing to be initiated any proceeding, or otherwise asserting or seeking to assert on behalf of themselves or others any right or protection under the DBA, Related Acts, or 29 CFR parts 1, 3, or 5;

iii. Cooperating in any investigation or other compliance action, or testifying in any proceeding under the DBA, Related Acts, or 29 CFR parts 1, 3, or 5; or

iv. Informing any other person about their rights under the DBA, Related Acts, or 29 CFR parts 1, 3, or 5.

B. Contract Work Hours and Safety Standards Act (CWHSSA)

The Agency Head must cause or require the contracting officer to insert the following clauses set forth in 29 CFR 5.5(b)(1), (2), (3), (4), and (5) in full, or (for contracts covered by the Federal Acquisition Regulation) by reference, in any contract in an amount in excess of $100,000 and subject to the overtime provisions of the Contract Work Hours and Safety Standards Act. These clauses must

be inserted in addition to the clauses required by 29 CFR 5.5(a) or 4.6. As used in this paragraph, the terms "laborers and mechanics" include watchpersons and guards.

1. **Overtime requirements.** No contractor or subcontractor contracting for any part of the contract work which may require or involve the employment of laborers or mechanics shall require or permit any such laborer or mechanic in any workweek in which he or she is employed on such work to work in excess of forty hours in such workweek unless such laborer or mechanic receives compensation at a rate not less than one and one-half times the basic rate of pay for all hours worked in excess of forty hours in such workweek.
2. **Violation; liability for unpaid wages; liquidated damages.** In the event of any violation of the clause set forth in 29 CFR 5.5(b)(1) the contractor and any subcontractor responsible therefor shall be liable for the unpaid wages and interest from the date of the underpayment. In addition, such contractor and subcontractor shall be liable to the United States (in the case of work done under contract for the District of Columbia or a territory, to such District or to such territory), for liquidated damages. Such liquidated damages shall be computed with respect to each individual laborer or mechanic, including watchpersons and guards, employed in violation of the clause set forth in 29 CFR 5.5(b)(1), in the sum of $31 for each calendar day on which such individual was required or permitted to work in excess of the standard workweek of forty hours without payment of the overtime wages required by the clause set forth in 29 CFR 5.5(b)(1).
3. **Withholding for unpaid wages and liquidated damages**

i. **Withholding process** The U.S Department of Housing and Urban Development or the recipient of Federal assistance may, upon its own action, or must, upon written request of an authorized representative of the Department of Labor, withhold or cause to be withheld from the contractor so much of the accrued payments or advances as may be considered necessary to satisfy the liabilities of the prime contractor or any subcontractor for any unpaid wages; monetary relief, including interest; and liquidated damages required by the clauses set forth in 29 CFR 5.5(b) on this contract, any other Federal contract with the same prime contractor, or any other federally assisted contract subject to the Contract Work Hours and Safety Standards Act that is held by the same prime contractor (as defined in 29 CFR 5.2). The necessary funds may be withheld from the contractor under this contract, any other Federal contract with the same prime contractor, or any other federally assisted contract that is subject to the Contract Work Hours and Safety Standards Act and is held by the same prime contractor, regardless of whether the other contract was awarded or assisted by the same agency, and such funds may be used to satisfy the contractor liability for which the funds were withheld.

ii **Priority to withheld funds** The Department has priority to funds withheld or to be withheld in accordance with 29 CFR 5.5(a)(2)(i) or (b)(3)(i), or both, over claims to those funds by:

- **A.** A contractor's surety(ies), including without limitation performance bond sureties and payment bond sureties;
- **B.** A contracting agency for its reprocurement costs;
- **C.** A trustee(s) (either a court-appointed trustee or a U.S. trustee, or both) in bankruptcy of a contractor, or a contractor's bankruptcy estate;
- **D.** A contractor's assignee(s);
- **E.** A contractor's successor(s); or
- **F.** A claim asserted under the Prompt Payment Act, 31 U.S.C. 3901-3907.

4. ***Subcontracts***. The contractor or subcontractor must insert in any subcontracts the clauses set forth in 29 CFR 5.5(b)(1) through (5) and a clause requiring the subcontractors to include these clauses in any lower tier subcontracts. The prime contractor is responsible for compliance by any subcontractor or lower tier subcontractor with the clauses set forth in 29 CFR 5.5(b)(1) through (5). In the event of any violations of these clauses, the prime contractor and any subcontractor(s) responsible will be liable for any unpaid wages and monetary relief, including interest from the date of the underpayment or loss,

due to any workers of lower-tier subcontractors, and associated liquidated damages and may be subject to debarment, as appropriate.

5 **Anti-retaliation** It is unlawful for any person to discharge, demote, intimidate, threaten, restrain, coerce, blacklist, harass, or in any other manner discriminate against, or to cause any person to discharge, demote, intimidate, threaten, restrain, coerce, blacklist, harass, or in any other manner discriminate against, any worker or job applicant for:

- **i.** Notifying any contractor of any conduct which the worker reasonably believes constitutes a violation of the Contract Work Hours and Safety Standards Act (CWHSSA) or its implementing regulations in 29 CFR part 5;
- **ii.** Filing any complaint, initiating or causing to be initiated any proceeding, or otherwise asserting or seeking to assert on behalf of themselves or others any right or protection under CWHSSA or 29 CFR part 5;
- **iii.** Cooperating in any investigation or other compliance action, or testifying in any proceeding under CWHSSA or 29 CFR part 5; or
- **iv.** Informing any other person about their rights under CWHSSA or 29 CFR part 5.

C. **CWHSSA required records clause** In addition to the clauses contained in 29 CFR 5.5(b), in any contract subject only to the Contract Work Hours and Safety Standards Act and not to any of the other laws referenced by 29 CFR 5.1, the Agency Head must cause or require the contracting officer to insert a clause requiring that the contractor or subcontractor must maintain regular payrolls and other basic records during the course of the work and must preserve them for a period of 3 years after all the work on the prime contract is completed for all laborers and mechanics, including guards and watchpersons, working on the contract. Such records must contain the name; last known address, telephone number, and email address; and social security number of each such worker; each worker's correct classification(s) of work actually performed; hourly rates of wages paid; daily and weekly number of hours actually worked; deductions made and actual wages paid. Further, the Agency Head must cause or require the contracting officer to insert in any such contract a clause providing that the records to be maintained under this paragraph must be made available by the contractor or subcontractor for inspection, copying, or transcription by authorized representatives of the (write the name of agency) and the Department of Labor, and the contractor or subcontractor will permit such representatives to interview workers during working hours on the job.

D. **Incorporation of contract clauses and wage determinations by reference** Although agencies are required to insert the contract clauses set forth in this section, along with appropriate wage determinations, in full into covered contracts, and contractors and subcontractors are required to insert them in any lower-tier subcontracts, the incorporation by reference of the required contract clauses and appropriate wage determinations will be given the same force and effect as if they were inserted in full text.

E. **Incorporation by operation of law** The contract clauses set forth in this section (or their equivalent under the Federal Acquisition Regulation), along with the correct wage determinations, will be considered to be a part of every prime contract required by the applicable statutes referenced by 29 CFR 5.1 to include such clauses, and will be effective by operation of law, whether or not they are included or incorporated by reference into such contract, unless the Administrator grants a variance, tolerance, or exemption from the application of this paragraph. Where the clauses and applicable wage determinations are effective by operation of law under this paragraph, the prime contractor must be compensated for any resulting increase in wages in accordance with applicable law.

F. HEALTH AND SAFETY

The provisions of this paragraph (F) are applicable where the amount of the prime contract exceeds **$100,000**.

1. No laborer or mechanic shall be required to work in surroundings or under working conditions which are unsanitary, hazardous, or dangerous to his or her health and safety, as determined under construction safety and health standards promulgated by the Secretary of Labor by regulation.
2. The contractor shall comply with all regulations issued by the Secretary of Labor pursuant to 29 CFR Part 1926 and failure to comply may result in imposition of sanctions pursuant to the Contract Work Hours and Safety Standards Act, (Public Law 91-54, 83 Stat 96), 40 U.S.C. § 3701 et seq.
3. The contractor shall include the provisions of this paragraph in every subcontract, so that such provisions will be binding on each subcontractor. The contractor shall take such action with respect to any subcontractor as the Secretary of Housing and Urban Development or the Secretary of Labor shall direct as a means of enforcing such provisions.

U.S. DEPARTMENT OF HOUSING AND URBAN DEVELOPMENT
COMMUNITY DEVELOPMENT BLOCK GRANT PROGRAM
CONTRACTOR'S CERTIFICATION

CONCERNING LABOR STANDARDS AND PREVAILING WAGE REQUIREMENTS

TO (appropriate recipient)	DATE
	PROJECT NUMBER (if any)
C/O	PROJECT NAME

1. The undersigned, having executed a contract with _____ _____ for the construction of the above-identified project, acknowledges that:

   (a) The Labor Standards provisions are included in the aforesaid contract,

   (b) Correction of any infractions of the aforesaid conditions, including infractions by any subcontractors and any lower tier subcontractors, is Contractor's responsibility.

2. Certifies that:

   (a) Neither Contractor nor any firm, partnership or association in which it has substantial interest is designated as an ineligible contractor by the Comptroller General of the United States pursuant to Section 5.6(b) of the Regulations of the Secretary of Labor, Part 5 (29 CFR, Part 5) or pursuant to Section 3(a) of the Davis-Bacon Act, as amended.

   (b) No part of the aforementioned contract has been or will be subcontracted to any subcontractor if such subcontractor or any firm, corporation, partnership or association in which such subcontractor has a substantial interest is designated as an ineligible contractor pursuant to any of the aforementioned regulatory or statutory provisions.

3. Contractor agrees to obtain and forward to the aforementioned recipient within ten days after the execution of any subcontract, including those executed by subcontractors and any lower tier subcontractors, a Subcontractor's Certification Concerning Labor Standards and Prevailing Wage Requirements executed by the subcontractors.

4. Certifies that:

   (a) The legal name and the business address of the undersigned are:

   (b) The undersigned is (choose one):

(1) A SINGLE PROPRIETORSHIP	(3) A CORPORATION ORGANIZED IN THE STATE OF
(2) A PARTNERSHIP	(4) OTHER ORGANIZATION (Describe)

   (c) The name, title and address of the owner, partners or officers of the undersigned are:

NAME	TITLE	ADDRESS

   (d) The names and addresses of all other persons having a substantial interest in the undersigned, and the nature of the interest are:

NAME	ADDRESS	NATURE OF INTEREST

(e) The names, addresses and trade classifications of all other building construction contractors in which the undersigned has a substantial interest are:

NAME	ADDRESS	TRADE CLASSIFICATION

(Contractor)

Date

By

APPENDIX I

"General Decision Number: TX20250007 01/03/2025

Superseded General Decision Number: TX20240007

State: Texas

Construction Types: Heavy and Highway

Counties: Atascosa, Bandera, Bastrop, Bell, Bexar, Brazos, Burleson, Caldwell, Comal, Coryell, Guadalupe, Hays, Kendall, Lampasas, McLennan, Medina, Robertson, Travis, Williamson and Wilson Counties in Texas.

HEAVY (excluding tunnels and dams, not to be used for work on Sewage or Water Treatment Plants or Lift / Pump Stations in Bell, Coryell, McClennon and Williamson Counties) and HIGHWAY Construction Projects

Note: Contracts subject to the Davis-Bacon Act are generally required to pay at least the applicable minimum wage rate required under Executive Order 14026 or Executive Order 13658. Please note that these Executive Orders apply to covered contracts entered into by the federal government that are subject to the Davis-Bacon Act itself, but do not apply to contracts subject only to the Davis-Bacon Related Acts, including those set forth at 29 CFR 5.1(a)(1).

If the contract is entered into on or after January 30, 2022, or the contract is renewed or extended (e.g., an option is exercised) on or after January 30, 2022:	. Executive Order 14026 generally applies to the contract. . The contractor must pay all covered workers at least $17.75 per hour (or the applicable wage rate listed on this wage determination, if it is higher) for all hours spent performing on the contract in 2025.
If the contract was awarded on or between January 1, 2015 and January 29, 2022, and the contract is not renewed or extended on or after January 30, 2022:	. Executive Order 13658 generally applies to the contract. . The contractor must pay all covered workers at least $13.30 per hour (or the applicable wage rate listed on this wage determination, if it is higher) for all hours spent performing on that contract in 2025.

The applicable Executive Order minimum wage rate will be adjusted annually. If this contract is covered by one of the Executive Orders and a classification considered necessary for performance of work on the contract does not appear on this wage determination, the contractor must still submit a conformance request.

Additional information on contractor requirements and worker protections under the Executive Orders is available at

http://www.dol.gov/whd/govcontracts.

Modification Number	Publication Date
0	01/03/2025

SUTX2011-006 08/03/2011

	Rates	Fringes
CEMENT MASON/CONCRETE FINISHER (Paving and Structures)	$ 12.56 **	
ELECTRICIAN	$ 26.35	
FORM BUILDER/FORM SETTER		
Paving & Curb	$ 12.94 **	
Structures	$ 12.87 **	
LABORER		
Asphalt Raker	$ 12.12 **	
Flagger	$ 9.45 **	
Laborer, Common	$ 10.50 **	
Laborer, Utility	$ 12.27 **	
Pipelayer	$ 12.79 **	
Work Zone Barricade Servicer	$ 11.85 **	
PAINTER (Structures)	$ 18.34	
POWER EQUIPMENT OPERATOR:		
Agricultural Tractor	$ 12.69 **	
Asphalt Distributor	$ 15.55 **	
Asphalt Paving Machine	$ 14.36 **	
Boom Truck	$ 18.36	
Broom or Sweeper	$ 11.04 **	
Concrete Pavement Finishing Machine	$ 15.48 **	
Crane, Hydraulic 80 tons or less	$ 18.36	
Crane, Lattice Boom 80 tons or less	$ 15.87 **	
Crane, Lattice Boom over 80 tons	$ 19.38	
Crawler Tractor	$ 15.67 **	
Directional Drilling Locator	$ 11.67 **	
Directional Drilling Operator	$ 17.24 **	
Excavator 50,000 lbs or Less	$ 12.88 **	
Excavator over 50,000 lbs	$ 17.71 **	
Foundation Drill, Truck Mounted	$ 16.93 **	
Front End Loader, 3 CY or Less	$ 13.04 **	
Front End Loader, Over 3 CY	$ 13.21 **	
Loader/Backhoe	$ 14.12 **	
Mechanic	$ 17.10 **	
Milling Machine	$ 14.18 **	
Motor Grader, Fine Grade	$ 18.51	
Motor Grader, Rough	$ 14.63 **	
Pavement Marking Machine	$ 19.17	
Reclaimer/Pulverizer	$ 12.88 **	

Roller, Asphalt.....$ 12.78 **
Roller, Other.....$ 10.50 **
Scraper.....$ 12.27 **
Spreader Box.....$ 14.04 **
Trenching Machine, Heavy....$ 18.48

Servicer.....$ 14.51 **

Steel Worker
Reinforcing.....$ 14.00 **
Structural.....$ 19.29

TRAFFIC SIGNALIZATION:
Traffic Signal Installation
Traffic Signal/Light Pole
Worker.....$ 16.00 **

TRUCK DRIVER
Lowboy-Float.....$ 15.66 **
Off Road Hauler.....$ 11.88 **
Single Axle.....$ 11.79 **
Single or Tandem Axle Dump
Truck.....$ 11.68 **
Tandem Axle Tractor w/Semi
Trailer.....$ 12.81 **

WELDER.....$ 15.97 **

WELDERS - Receive rate prescribed for craft performing operation to which welding is incidental.

==========

** Workers in this classification may be entitled to a higher minimum wage under Executive Order 14026 ($17.75) or 13658 ($13.30). Please see the Note at the top of the wage determination for more information. Please also note that the minimum wage requirements of Executive Order 14026 are not currently being enforced as to any contract or subcontract to which the states of Texas, Louisiana, or Mississippi, including their agencies, are a party.

Note: Executive Order (EO) 13706, Establishing Paid Sick Leave for Federal Contractors applies to all contracts subject to the Davis-Bacon Act for which the contract is awarded (and any solicitation was issued) on or after January 1, 2017. If this contract is covered by the EO, the contractor must provide employees with 1 hour of paid sick leave for every 30 hours they work, up to 56 hours of paid sick leave each year. Employees must be permitted to use paid sick leave for their own illness, injury or other health-related needs, including preventive care; to assist a family member (or person who is like family to the employee) who is ill, injured, or has other health-related needs, including preventive care; or for reasons resulting from, or to assist a family member (or person who is like family to the employee) who is a victim of, domestic violence, sexual assault, or stalking. Additional information on contractor requirements and worker protections under the EO is available at
https://www.dol.gov/agencies/whd/government-contracts.

Unlisted classifications needed for work not included within the scope of the classifications listed may be added after award only as provided in the labor standards contract clauses

(29CFR 5.5 (a) (1) (iii)).

The body of each wage determination lists the classifications and wage rates that have been found to be prevailing for the type(s) of construction and geographic area covered by the wage determination. The classifications are listed in alphabetical order under rate identifiers indicating whether the particular rate is a union rate (current union negotiated rate), a survey rate, a weighted union average rate, a state adopted rate, or a supplemental classification rate.

Union Rate Identifiers

A four-letter identifier beginning with characters other than ""SU"", ""UAVG"", ?SA?, or ?SC? denotes that a union rate was prevailing for that classification in the survey. Example: PLUM0198-005 07/01/2024. PLUM is an identifier of the union whose collectively bargained rate prevailed in the survey for this classification, which in this example would be Plumbers. 0198 indicates the local union number or district council number where applicable, i.e., Plumbers Local 0198. The next number, 005 in the example, is an internal number used in processing the wage determination. The date, 07/01/2024 in the example, is the effective date of the most current negotiated rate.

Union prevailing wage rates are updated to reflect all changes over time that are reported to WHD in the rates in the collective bargaining agreement (CBA) governing the classification.

Union Average Rate Identifiers

The UAVG identifier indicates that no single rate prevailed for those classifications, but that 100% of the data reported for the classifications reflected union rates. EXAMPLE: UAVG-OH-0010 01/01/2024. UAVG indicates that the rate is a weighted union average rate. OH indicates the State of Ohio. The next number, 0010 in the example, is an internal number used in producing the wage determination. The date, 01/01/2024 in the example, indicates the date the wage determination was updated to reflect the most current union average rate.

A UAVG rate will be updated once a year, usually in January, to reflect a weighted average of the current rates in the collective bargaining agreements on which the rate is based.

Survey Rate Identifiers

The ""SU"" identifier indicates that either a single non-union rate prevailed (as defined in 29 CFR 1.2) for this classification in the survey or that the rate was derived by computing a weighted average rate based on all the rates reported in the survey for that classification. As a weighted average rate includes all rates reported in the survey, it may include both union and non-union rates. Example: SUFL2022-007 6/27/2024. SU indicates the rate is a single non-union prevailing rate or a weighted average of survey data for that classification. FL indicates the State of Florida. 2022 is the year of the survey on which these classifications and rates are based. The next number, 007 in the example, is an internal number used in producing the wage determination. The date,

6/27/2024 in the example, indicates the survey completion date for the classifications and rates under that identifier.

?SU? wage rates typically remain in effect until a new survey is conducted. However, the Wage and Hour Division (WHD) has the discretion to update such rates under 29 CFR 1.6(c)(1).

State Adopted Rate Identifiers

The ""SA"" identifier indicates that the classifications and prevailing wage rates set by a state (or local) government were adopted under 29 C.F.R 1.3(g)-(h). Example: SAME2023-007 01/03/2024. SA reflects that the rates are state adopted. ME refers to the State of Maine. 2023 is the year during which the state completed the survey on which the listed classifications and rates are based. The next number, 007 in the example, is an internal number used in producing the wage determination. The date, 01/03/2024 in the example, reflects the date on which the classifications and rates under the ?SA? identifier took effect under state law in the state from which the rates were adopted.

WAGE DETERMINATION APPEALS PROCESS

1) Has there been an initial decision in the matter? This can be:

a) a survey underlying a wage determination
b) an existing published wage determination
c) an initial WHD letter setting forth a position on a wage determination matter
d) an initial conformance (additional classification and rate) determination

On survey related matters, initial contact, including requests for summaries of surveys, should be directed to the WHD Branch of Wage Surveys. Requests can be submitted via email to davisbaconinfo@dol.gov or by mail to:

Branch of Wage Surveys
Wage and Hour Division
U.S. Department of Labor
200 Constitution Avenue, N.W.
Washington, DC 20210

Regarding any other wage determination matter such as conformance decisions, requests for initial decisions should be directed to the WHD Branch of Construction Wage Determinations. Requests can be submitted via email to BCWD-Office@dol.gov or by mail to:

Branch of Construction Wage Determinations
Wage and Hour Division
U.S. Department of Labor
200 Constitution Avenue, N.W.
Washington, DC 20210

2) If an initial decision has been issued, then any interested party (those affected by the action) that disagrees with the decision can request review and reconsideration from the Wage and Hour Administrator (See 29 CFR Part 1.8 and 29 CFR Part 7). Requests for review and reconsideration can be submitted via email to dba.reconsideration@dol.gov or by mail to:

Wage and Hour Administrator
U.S. Department of Labor
200 Constitution Avenue, N.W.
Washington, DC 20210

The request should be accompanied by a full statement of the interested party's position and any information (wage payment data, project description, area practice material, etc.) that the requestor considers relevant to the issue.

3) If the decision of the Administrator is not favorable, an interested party may appeal directly to the Administrative Review Board (formerly the Wage Appeals Board). Write to:

Administrative Review Board
U.S. Department of Labor
200 Constitution Avenue, N.W.
Washington, DC 20210.

==========

END OF GENERAL DECISION"

APPENDIX K

CONTRACTOR'S LOCAL OPPORTUNITY PLAN

_(name of company)_____ agrees to implement the following specific affirmative action steps directed at increasing the utilization of lower income residents and businesses within the (City/County) of _____.

A. To ascertain from the City/County's CDBG program official the exact boundaries of the project area and where advantageous, seek the assistance of local officials in preparing and implementing the affirmative action plan.
B. To attempt to recruit from within the city the necessary number of lower income residents through: local advertising media, signs placed at the proposed site for the project, and community organizations and public or private institutions operating within and servicing the project area such as Service Employment and Redevelopment (SER), Opportunities Industrialization Center (OIC), Urban League, Concentrated Employment Program, Hometown Plan, or the U.S. Employment Service.
C. To maintain a list of all lower income residents who have applied either on their own or on referral from any source, and to employ such persons, if otherwise eligible and if a vacancy exists.
D. To insert this plan in all bid documents and to require all bidders on subcontracts to submit an affirmative action plan including utilization goals and the specific steps planned to accomplish these goals.
E. To ensure that subcontracts (greater than $10,000), which are typically let on a negotiated rather than a bid basis in areas other than the covered project area, are also let on a negotiated basis, whenever feasible, in a covered project area.
F. To formally contact unions, subcontractors, and trade associations to secure their cooperation in this effort.
G. To ensure that all appropriate project area business concerns are notified of pending sub-contractual opportunities.
H. To maintain records, including copies of correspondence, memoranda, etc., which document that all of the above affirmative action steps have been taken.
I. To appoint or recruit an executive official of the company or agency as Equal Opportunity Officer to coordinate the implementation of this plan.
J. To maintain records concerning the amount and number of contracts, subcontracts, and purchases which contribute to objectives.
K. To maintain records of all projected work force needs for all phases of the project by occupation, trade, skill level, and number of positions and to update these projections based on the extent to which hiring meets these Local Opportunity objectives.

As officers and representatives of_____(name of company)_____, we the undersigned have read and fully agree to this Plan, and become a party to the full implementation of the program and its provisions.

_____
Signature

_____
Printed Name

_____
Title

_____
Date

PROPOSED CONTRACTS BREAKDOWN

Type of Contracts	No. of Contracts	Approx. Total Dollar Amount	Estimated No. to local Business	Estimated $ Amount Local Business

ESTIMATED PROJECT WORKFORCE BREAKDOWN

Work Classifications	Total Estimated Positions	No. of Positions Currently Filled	No. of Positions not Filled	No. of Positions to fill with LM/ Residents
Totals				

APPENDIX L

NONCOLLUSION AFFIDAVIT OF PRIME BIDDER

State of Texas)

County of _____)

_____, being first duly sworn, deposes and says that:

(1) He/She is _____ of _____, the Bidder that has submitted the attached Bid;

(2) He/She is fully informed respecting the preparation and contents of the attached Bid and of all pertinent circumstances respecting such Bid;

(3) Such Bid is genuine and is not a collusive or sham Bid;

(4) Neither the said Bidder nor any of its officers, partners, owners, agents, representatives, employees or parties in interest, including this affiant, has in any way colluded, conspired, connived or agreed, directly or indirectly with another Bidder, firm or person to submit a collusive or sham Bid in connection with the Contract for which the attached Bid has been submitted or to refrain from bidding in connection with such Contract, or has in any manner, directly or indirectly, sought by agreement or collusion or communication or conference with any other Bidder, firm or person to fix the price or prices in the attached Bid or of any other Bidder, or to fix an overhead, profit or cost element of the Bid price or the Bid price of any other Bidder, or to secure through any collusion, conspiracy, connivance or unlawful agreement any advantage against the _____ (Local Public Agency) or any person interested in the proposed Contract; and

(5) The price or prices quoted in the attached Bid are fair and proper and are not tainted by any collusion, conspiracy, connivance or unlawful agreement on the part of the Bidder or any of its agents, representatives, owners, employees, or parties in interest, including this affiant.

(Signed) _____

_____
Title

Subscribed and sworn to me this _____ day of _____.

By: _____
Notary Public

My commission expires _____

APPENDIX M

CONTRACTOR CERTIFICATIONS

U.S. Department of Housing and Urban Development

CERTIFICATION OF BIDDER REGARDING CIVIL RIGHTS LAWS AND REGULATIONS

INSTRUCTIONS

CERTIFICATION OF BIDDER REGARDING Executive Order 11246 and Federal Laws Requiring Federal Contractor to adopt and abide by equal employment opportunity and affirmative action in their hiring, firing, and promotion practices. This includes practices related to race, color, gender, religion, national origin, disability, and veterans' rights.

NAME AND ADDRESS OF BIDDER (include ZIP Code)

CERTIFICATION BY BIDDER

Bidder has participated in a previous contract or subcontract subject to Civil Rights Laws and Regulations.

☐ Yes ☐ No

The undersigned hereby certifies that:

☐ The Provision of Local Training, Employment, and Business Opportunities clause (Section 3 provision) is included in the Contract. A written Section 3 plan (Local Opportunity Plan) was prepared and submitted as part of the bid proceedings (if bid equals or exceeds $100,000).

☐ The Equal Opportunity clause is included in the Contract (if bid equals or exceeds $10,000).

Have you ever been or are you being considered for sanction due to violation of Executive Order 11246, as amended?

☐ Yes ☐ No

NAME AND TITLE OF SIGNER (Please type)

SIGNATURE DATE

APPENDIX N

SECTION 504 CERTIFICATION

POLICY OF NONDISCRIMINATION ON THE BASIS OF DISABILITY

The _____ does not discriminate on the basis of disability status in the admission or access to, or treatment or employment in, its federally assisted programs or activities.

(Name) _____

(Address) _____

_____

City State Zip

Telephone Number ( ) _____ - _____ Voice

( ) _____ - _____ TDD

_____has been designated to coordinate compliance with the nondiscrimination requirements contained in the Department of Housing and Urban Development's (HUD) regulations implementing Section 504 (24 CFR Part 8. dated June 2, 1988).

APPENDIX O

BYRD ANTI-LOBBYING AMENDMENT

Contractors who apply or bid for an award of $100,000 or more shall file the required certification. Each tier certifies to the tier above that it will not and has not used Federal appropriated funds to pay any person or organization for influencing or attempting to influence an officer or employee of any agency, a Member of Congress, officer or employee of Congress, or an employee of a Member of Congress in connection with obtaining any Federal contract, grant, or any other award covered by 31 U.S.C. § 1352. Each tier shall also disclose any lobbying with non-Federal funds that takes place in connection with obtaining any Federal award. Such disclosures are forwarded from tier to tier up to the recipient who in turn will forward the certification(s) to the awarding agency.

APPENDIX A, 44 C.F.R. PART 18 – CERTIFICATION REGARDING LOBBYING – REQUIRED FOR CONTRACTS OVER $100,000

Certification for Contracts, Grants, Loans, and Cooperative Agreements

The undersigned certifies, to the best of his or her knowledge and belief, that:

1. No Federal appropriated funds have been paid or will be paid, by or on behalf of the undersigned, to any person for influencing or attempting to influence an officer or employee of an agency, a Member of Congress, an officer or employee of Congress, or an employee of a Member of Congress in connection with the awarding of any Federal contract, the making of any Federal grant, the making of any Federal loan, the entering into of any cooperative agreement, and the extension, continuation, renewal, amendment, or modification of any Federal contract, grant, loan, or cooperative agreement.

2. If any funds other than Federal appropriated funds have been paid or will be paid to any person for influencing or attempting to influence an officer or employee of any agency, a Member of Congress, an officer or employee of Congress, or an employee of a Member of Congress in connection with this Federal contract, grant, loan, or cooperative agreement, the undersigned shall complete and submit Standard Form-LLL, “Disclosure Form to Report Lobbying,” in accordance with its instructions.

3. The undersigned shall require that the language of this certification be included in the award documents for all subawards at all tiers (including subcontracts, subgrants, and contracts under grants, loans, and cooperative agreements) and that all subrecipients shall certify and disclose accordingly.

This certification is a material representation of fact upon which reliance was placed when this transaction was made or entered into. Submission of this certification is a prerequisite for making or entering into this transaction imposed by section 1352, title 31, U.S. Code. Any person who fails to file the required certification shall be subject to a civil penalty of not less than $10,000 and not more than $100,000 for each such failure.

The Contractor,_____, certifies or affirms the truthfulness and accuracy of each statement of its certification and disclosure, if any. In addition, the Contractor understands and agrees that the provisions of 31 U.S.C. Chap. 38, Administrative Remedies for False Claims and Statements, apply to this certification and disclosure, if any.

_____
Signature of Contractor's Authorized Official

_____
Name and Title of Contractor's Authorized Official

_____
Date